ROXTON

Catálogo 2024

Endless Versatility

ROXTON

Bathroom
Baño

UNDER-MOUNTED BASINS
PILETAS BAJO ENCIMERA

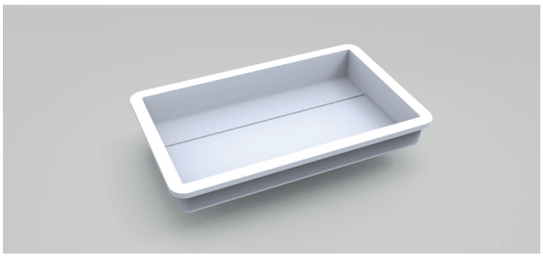

HID 3050

Interior Measurements Medidas Interiores	(mm)	495x295x70
Weight Peso	(Kg)	7,25
Wall thickness Grosor paredes	(mm)	10
Colours Colores		Blanco Standard and Polar White

* Other shapes, sizes and colours can be produced by demand
* Otras formas, tamaños y colores pueden ser producidos bajo demanda

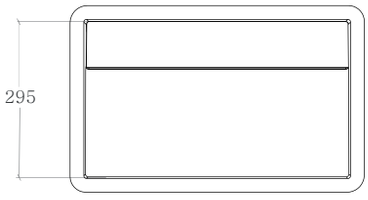

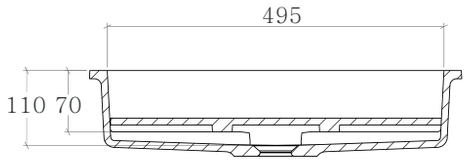

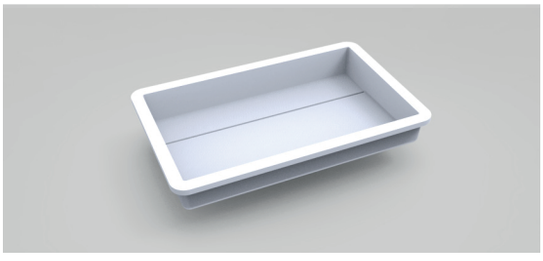

HID 3550

Interior Measurements ***Medidas Interiores***	(mm)	500x350x53
Weight ***Peso***	(Kg)	7,5
Wall thickness ***Grosor paredes***	(mm)	10
Colours ***Colores***		Blanco Standard and Polar White

* Other shapes, sizes and colours can be produced by demand
* Otras formas, tamaños y colores pueden ser producidos bajo demanda

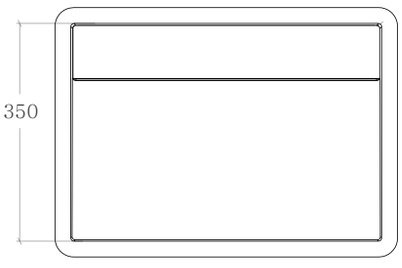

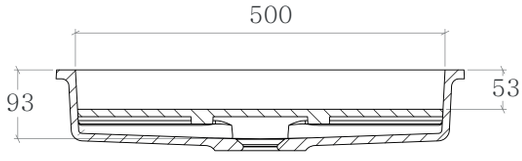

ROXTON

solits

UNDER-MOUNTED BASINS/ PILETAS BAJO ENCIMERA

BATHROOM . BAÑO

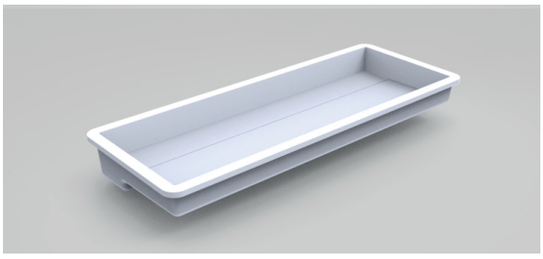

HID 3085

Interior Measurements Medidas Interiores	(mm)	845x295x70
Weight Peso	(Kg)	11,5
Wall thickness Grosor paredes	(mm)	10
Colours Colores		Blanco Standard and Polar White

* Other shapes, sizes and colours can be produced by demand
* Otras formas, tamaños y colores pueden ser producidos bajo demanda

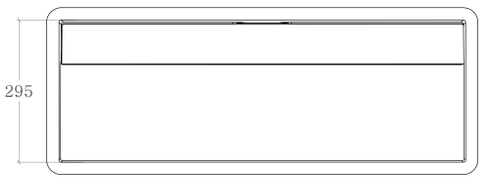

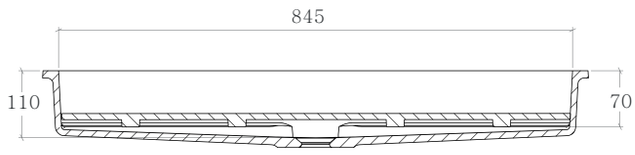

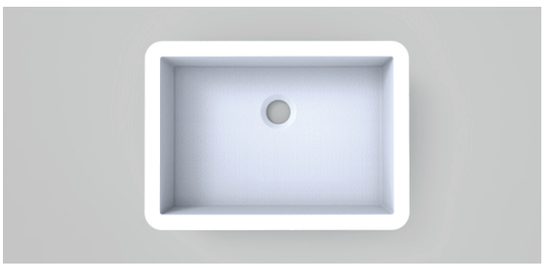

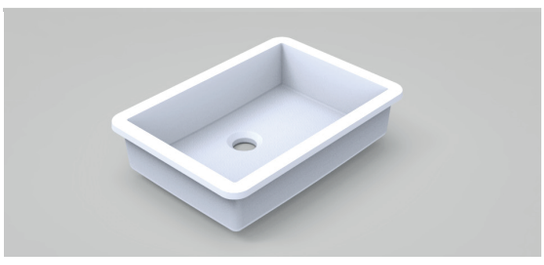

RT 2740

Interior Measurements ***Medidas Interiores***	(mm)	400x270x100
Weight ***Peso***	(Kg)	5,1
Wall thickness ***Grosor paredes***	(mm)	10
Colours ***Colores***		Blanco Standard and Polar White

* Other shapes, sizes and colours can be produced by demand
* Otras formas, tamaños y colores pueden ser producidos bajo demanda

** This product is also available with overflow*
** Este producto también está disponible con rebosadero*

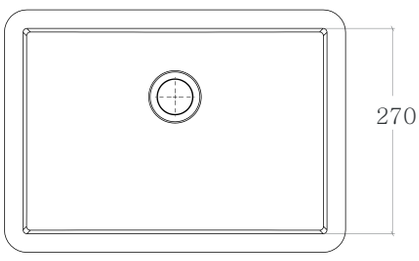

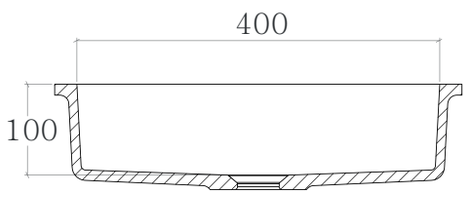

ROXTON

UNDER-MOUNTED BASINS/ PILETAS BAJO ENCIMERA

BATHROOM . BAÑO

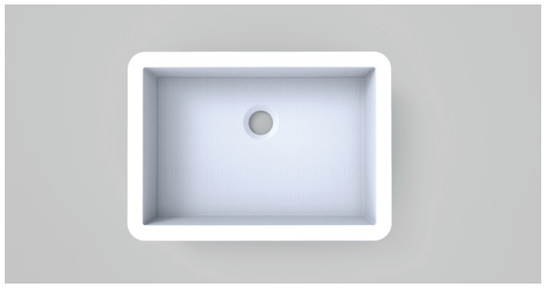

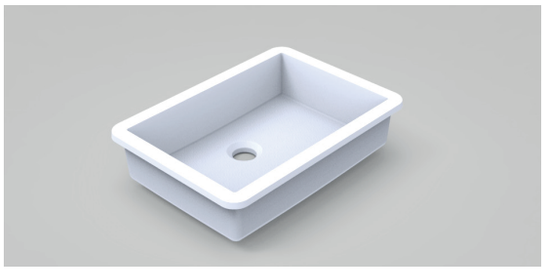

RT 3045

Interior Measurements Medidas Interiores	(mm)	450x300x100
Weight Peso	(Kg)	5,7
Wall thickness Grosor paredes	(mm)	10
Colours Colores		Blanco Standard and Polar White

* Other shapes, sizes and colours can be produced by demand
* Otras formas, tamaños y colores pueden ser producidos bajo demanda

** This product is also available with overflow*
** Este producto también está disponible con rebosadero*

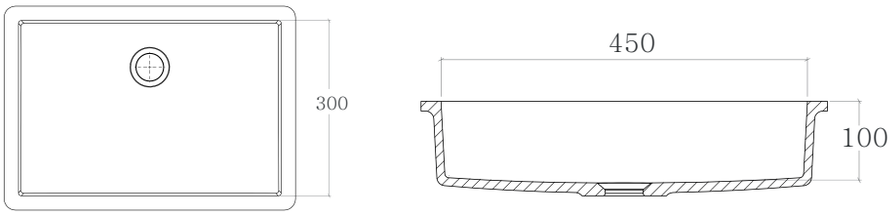

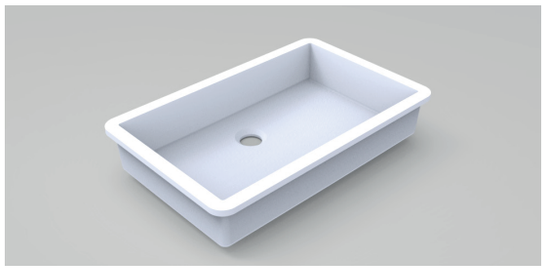

RT 3050

Interior Measurements Medidas Interiores	(mm)	500x300x100
Weight Peso	(Kg)	6,5
Wall thickness Grosor paredes	(mm)	10
Colours Colores		Blanco Standard and Polar White

* Other shapes, sizes and colours can be produced by demand
* Otras formas, tamaños y colores pueden ser producidos bajo demanda

** This product is also available with overflow*
** Este producto también está disponible con rebosadero*

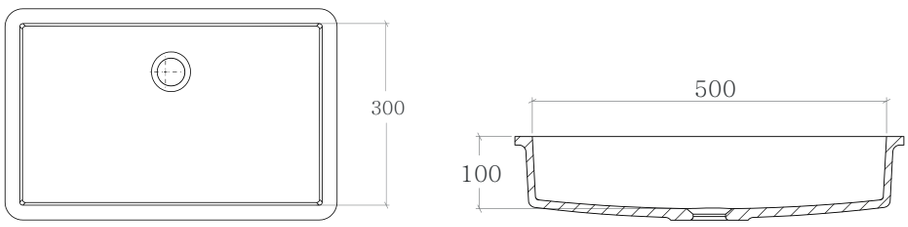

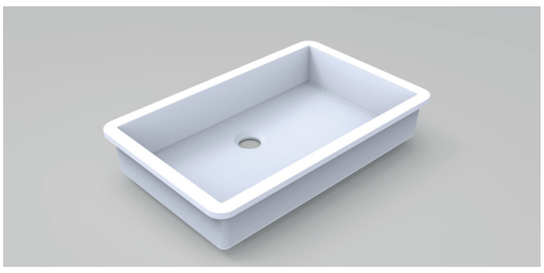

RT 3550

Interior Measurements Medidas Interiores	(mm)	500x350x100
Weight Peso	(Kg)	7,2
Wall thickness Grosor paredes	(mm)	10
Colours Colores		Blanco Standard and Polar White

* Other shapes, sizes and colours can be produced by demand
* Otras formas, tamaños y colores pueden ser producidos bajo demanda

** This product is also available with overflow*
** Este producto también está disponible con rebosadero*

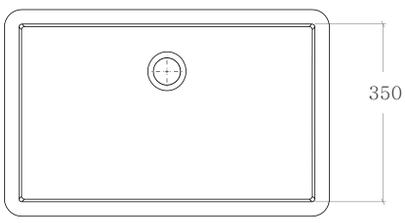

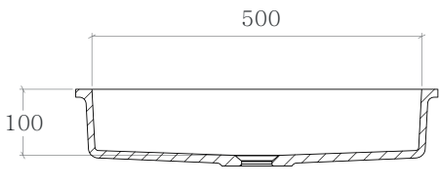

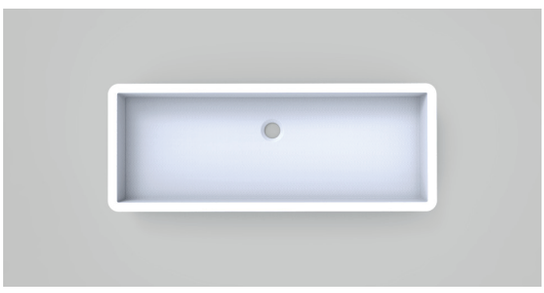

RT 3085

Interior Measurements Medidas Interiores	(mm)	850x300x100
Weight Peso	(Kg)	9,9
Wall thickness Grosor paredes	(mm)	10
Colours Colores		Blanco Standard and Polar White

* Other shapes, sizes and colours can be produced by demand
* Otras formas, tamaños y colores pueden ser producidos bajo demanda

** This product is also available with overflow*
** Este producto también está disponible con rebosadero*

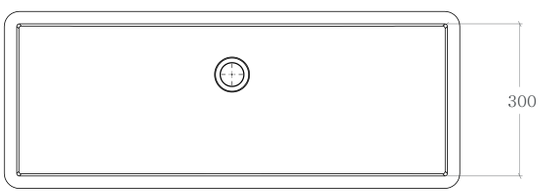

ROXTON

UNDER-MOUNTED BASINS/ PILETAS BAJO ENCIMERA

BATHROOM . BAÑO

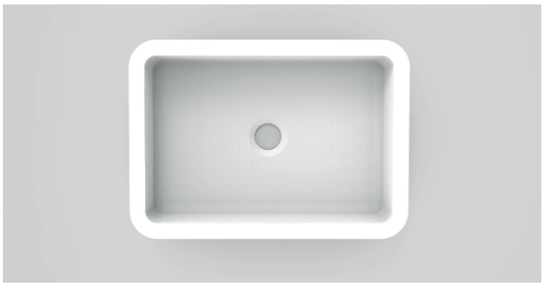

CRT 2740

Interior Measurements Medidas Interiores	(mm)	400x270x100
Weight Peso	(Kg)	4,95
Wall thickness Grosor paredes	(mm)	10
Colours Colores		Blanco Standard and Polar White

* Other shapes, sizes and colours can be produced by demand
* Otras formas, tamaños y colores pueden ser producidos bajo demanda

** This product is also available with overflow*
** Este producto también está disponible con rebosadero*

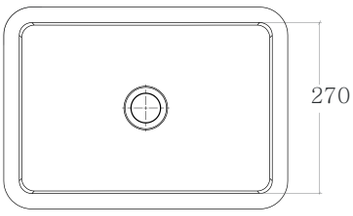

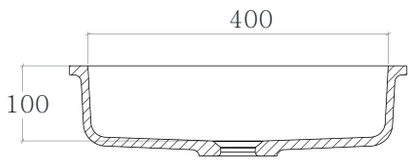

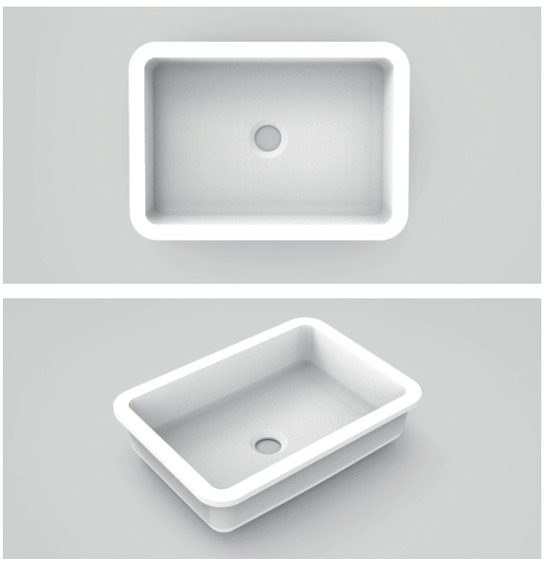

CRT 3045

Interior Measurements Medidas Interiores	(mm)	450x300x100
Weight Peso	(Kg)	5,45
Wall thickness Grosor paredes	(mm)	10
Colours Colores		Blanco Standard and Polar White

* Other shapes, sizes and colours can be produced by demand
* Otras formas, tamaños y colores pueden ser producidos bajo demanda

** This product is also available with overflow*
** Este producto también está disponible con rebosadero*

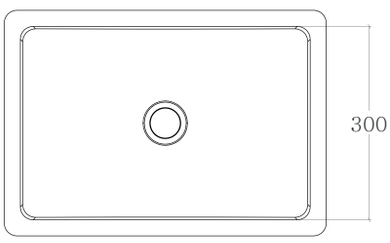

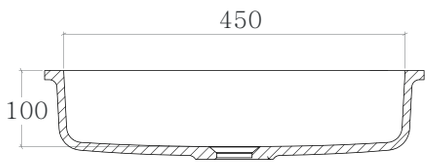

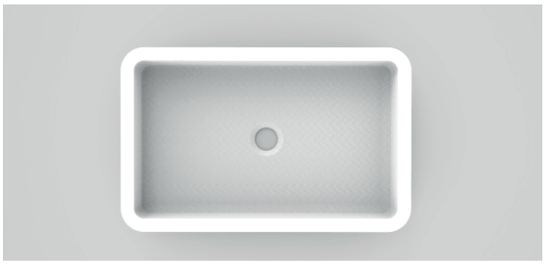

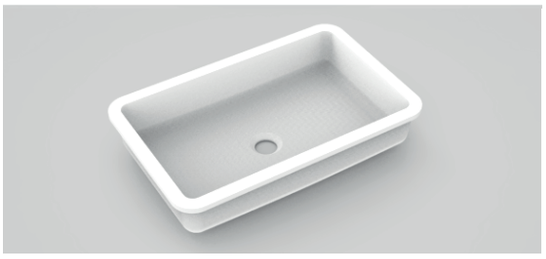

CRT 3050

Interior Measurements Medidas Interiores	(mm)	500x300x100
Weight Peso	(Kg)	6,3
Wall thickness Grosor paredes	(mm)	10
Colours Colores		Blanco Standard and Polar White

* Other shapes, sizes and colours can be produced by demand
* Otras formas, tamaños y colores pueden ser producidos bajo demanda

** This product is also available with overflow*
** Este producto también está disponible con rebosadero*

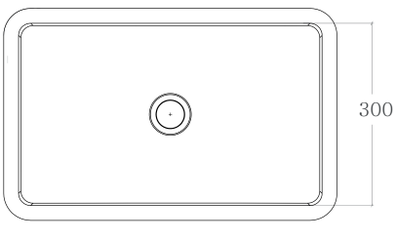

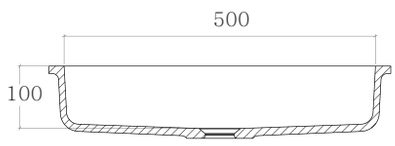

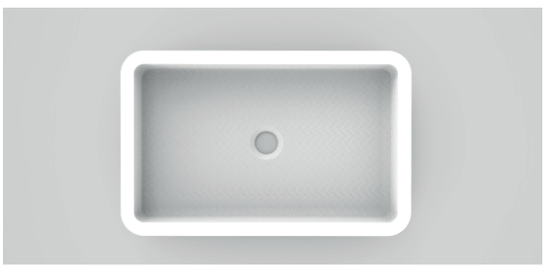

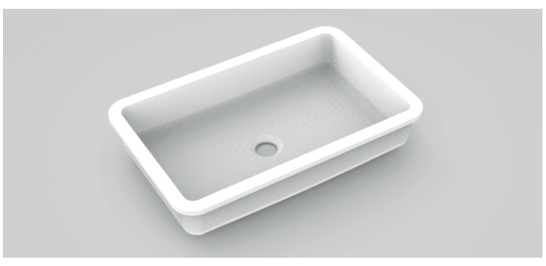

CRT 3550

Interior Measurements Medidas Interiores	(mm)	500x350x100
Weight Peso	(Kg)	7
Wall thickness Grosor paredes	(mm)	10
Colours Colores		Blanco Standard and Polar White

* Other shapes, sizes and colours can be produced by demand
* Otras formas, tamaños y colores pueden ser producidos bajo demanda

** This product is also available with overflow*
** Este producto también está disponible con rebosadero*

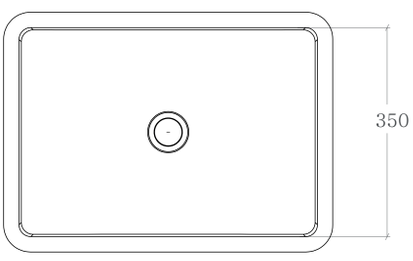

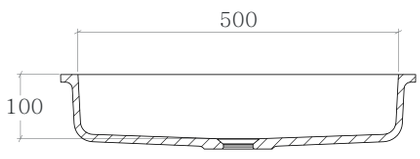

ROXTON

UNDER-MOUNTED BASINS/ PILETAS BAJO ENCIMERA

BATHROOM . BAÑO

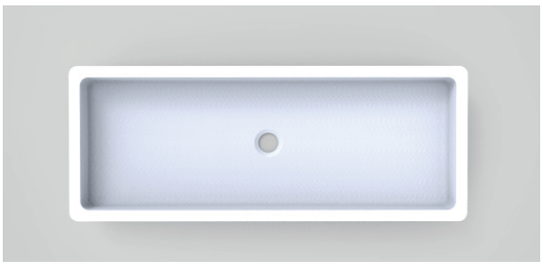

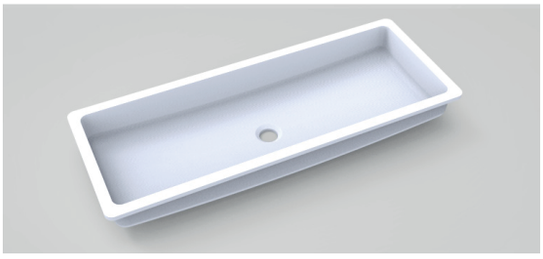

CRT 3085

Interior Measurements Medidas Interiores	(mm)	850x300x100
Weight Peso	(Kg)	9,2
Wall thickness Grosor paredes	(mm)	10
Colours Colores		Blanco Standard and Polar White

* Other shapes, sizes and colours can be produced by demand
* Otras formas, tamaños y colores pueden ser producidos bajo demanda

** This product is also available with overflow*
** Este producto también está disponible con rebosadero*

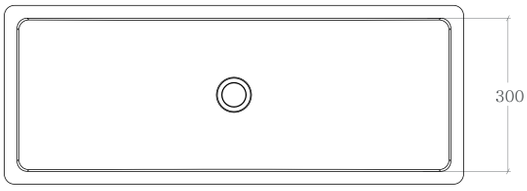

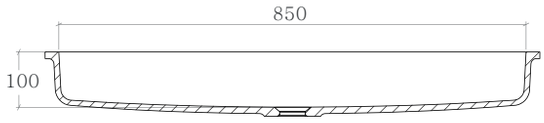

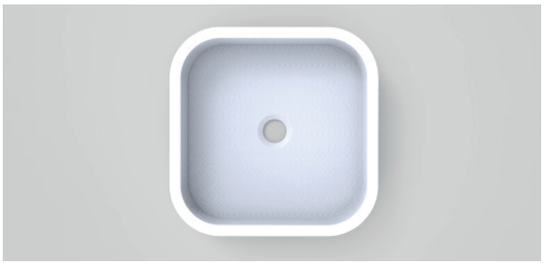

LAKE 3535 CP

Interior Measurements Medidas Interiores	(mm)	350x350x96
Weight Peso	(Kg)	7
Wall thickness Grosor paredes	(mm)	10
Colours Colores		Blanco Standard and Polar White

* Other shapes, sizes and colours can be produced by demand
* Otras formas, tamaños y colores pueden ser producidos bajo demanda

** This product is also available with overflow*
** Este producto también está disponible con rebosadero*

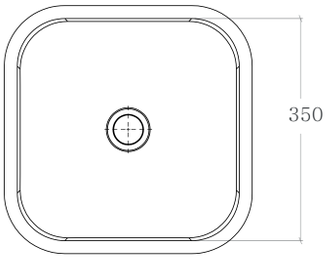

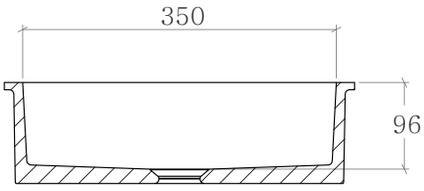

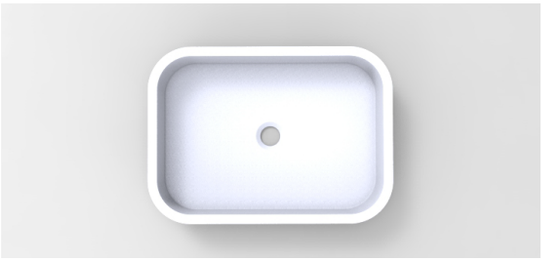

LAKE 3550 CP

Interior Measurements Medidas Interiores	(mm)	500x350x96
Weight Peso	(Kg)	9,9
Wall thickness Grosor paredes	(mm)	10
Colours Colores		Blanco Standard and Polar White

* Other shapes, sizes and colours can be produced by demand
* Otras formas, tamaños y colores pueden ser producidos bajo demanda

** This product is also available with overflow*
** Este producto también está disponible con rebosadero*

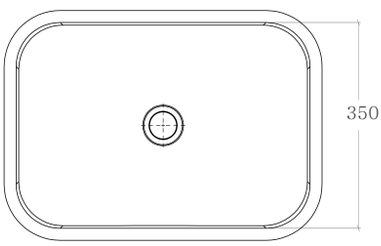

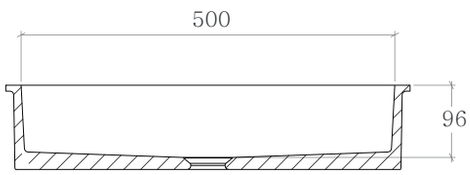

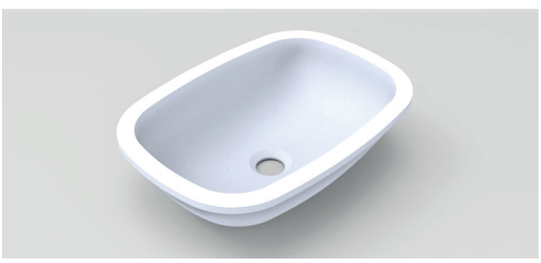

SOFT 2740 CP

Interior Measurements Medidas Interiores	(mm)	400x270x110
Weight Peso	(Kg)	4,85
Wall thickness Grosor paredes	(mm)	10
Colours Colores		Blanco Standard and Polar White

* Other shapes, sizes and colours can be produced by demand
* Otras formas, tamaños y colores pueden ser producidos bajo demanda

** This product is also available with overflow*
** Este producto también está disponible con rebosadero*

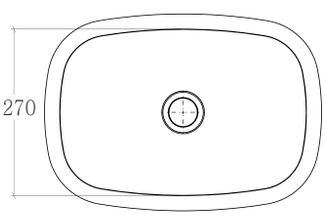

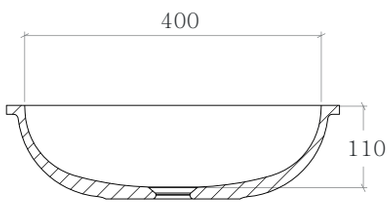

ROXTON

UNDER-MOUNTED BASINS/ PILETAS BAJO ENCIMERA

BATHROOM . BAÑO

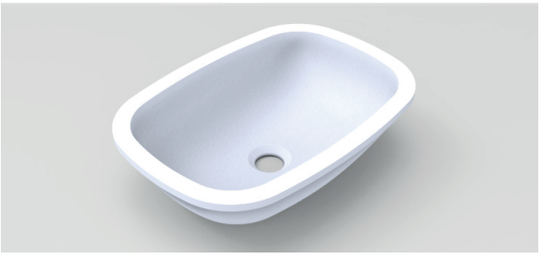

SOFT 3045 CP

Interior Measurements Medidas Interiores	(mm)	450x300x110
Weight Peso	(Kg)	6,2
Wall thickness Grosor paredes	(mm)	10
Colours Colores		Blanco Standard and Polar White

* Other shapes, sizes and colours can be produced by demand
* Otras formas, tamaños y colores pueden ser producidos bajo demanda

** This product is also available with overflow*
** Este producto también está disponible con rebosadero*

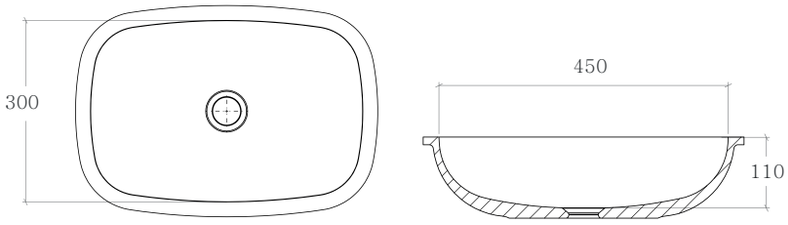

SOFT 3050 CP

Interior Measurements Medidas Interiores	(mm)	500x300x110
Weight Peso	(Kg)	6,8
Wall thickness Grosor paredes	(mm)	10
Colours Colores		Blanco Standard and Polar White

* Other shapes, sizes and colours can be produced by demand
* Otras formas, tamaños y colores pueden ser producidos bajo demanda

** This product is also available with overflow*
** Este producto también está disponible con rebosadero*

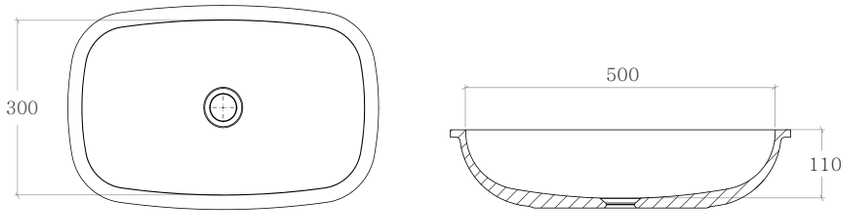

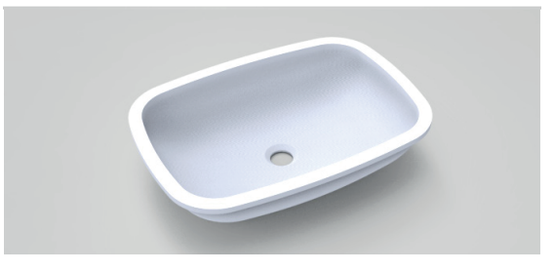

SOFT 3550 CP

Interior Measurements Medidas Interiores	(mm)	500x350x110
Weight Peso	(Kg)	8,3
Wall thickness Grosor paredes	(mm)	10
Colours Colores		Blanco Standard and Polar White

* Other shapes, sizes and colours can be produced by demand
* Otras formas, tamaños y colores pueden ser producidos bajo demanda

** This product is also available with overflow*
** Este producto también está disponible con rebosadero*

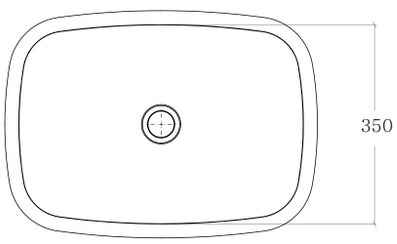

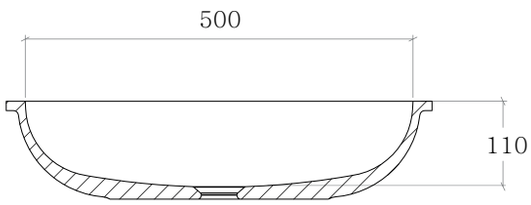

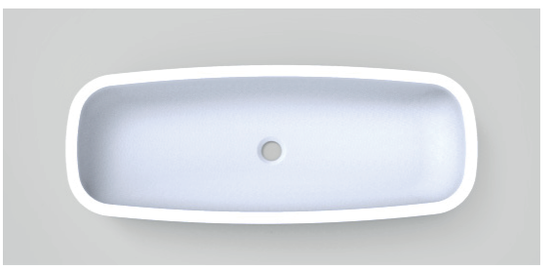

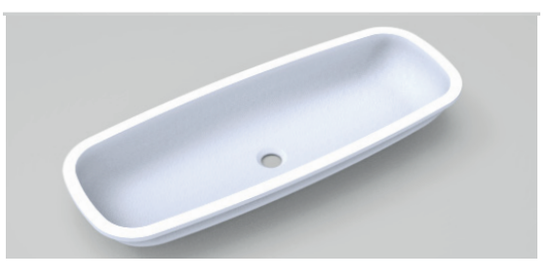

SOFT 3085 CP

Interior Measurements Medidas Interiores	(mm)	850x300x110
Weight Peso	(Kg)	11,2
Wall thickness Grosor paredes	(mm)	10
Colours Colores		Blanco Standard and Polar White

* Other shapes, sizes and colours can be produced by demand
* Otras formas, tamaños y colores pueden ser producidos bajo demanda

** This product is also available with overflow*
** Este producto también está disponible con rebosadero*

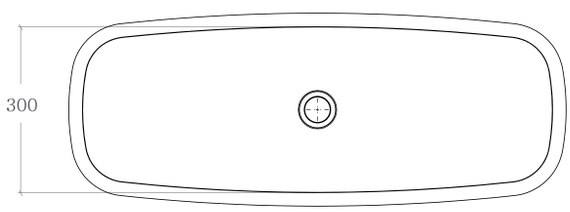

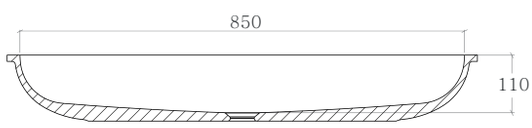

ROXTON

UNDER-MOUNTED BASINS/ PILETAS INTEGRADAS

BATHROOM . BAÑO

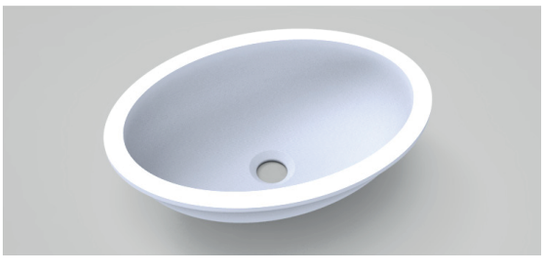

OVAL 2740 CP

Interior Measurements Medidas Interiores	(mm)	400x270x122
Weight Peso	(Kg)	4
Wall thickness Grosor paredes	(mm)	10
Colours Colores		Blanco Standard and Polar White

* Other shapes, sizes and colours can be produced by demand
* Otras formas, tamaños y colores pueden ser producidos bajo demanda

** This product is also available with overflow*
** Este producto también está disponible con rebosadero*

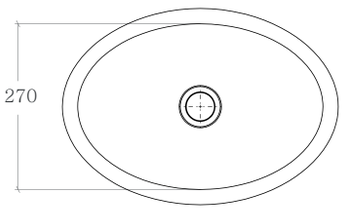

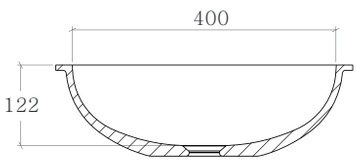

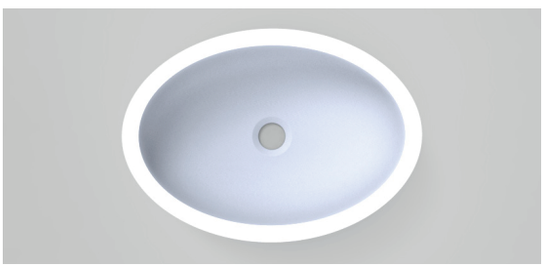

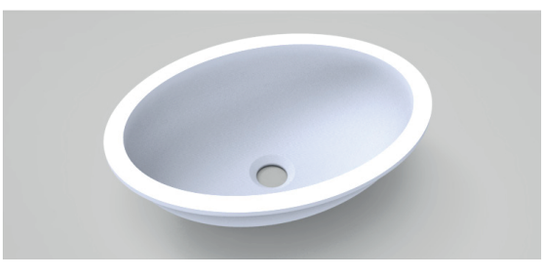

OVAL 3045 CP

Interior Measurements Medidas Interiores	(mm)	450x300x122
Weight Peso	(Kg)	5,1
Wall thickness Grosor paredes	(mm)	10
Colours Colores		Blanco Standard and Polar White

* Other shapes, sizes and colours can be produced by demand
* Otras formas, tamaños y colores pueden ser producidos bajo demanda

** This product is also available with overflow*
** Este producto también está disponible con rebosadero*

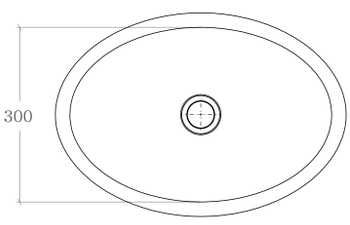

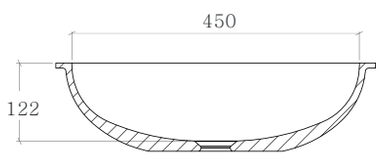

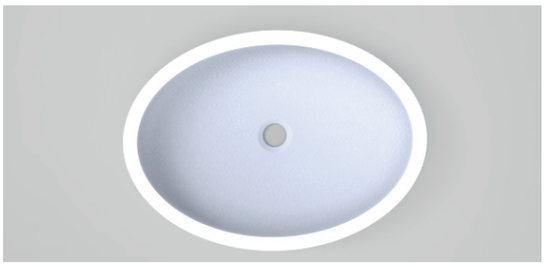

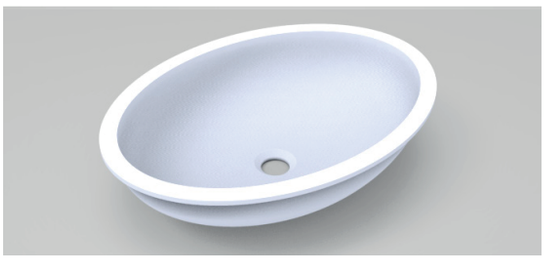

OVAL 3550 CP

Interior Measurements Medidas Interiores	(mm)	500x350x122
Weight Peso	(Kg)	7
Wall thickness Grosor paredes	(mm)	10
Colours Colores		Blanco Standard and Polar White

* Other shapes, sizes and colours can be produced by demand
* Otras formas, tamaños y colores pueden ser producidos bajo demanda

** This product is also available with overflow*
** Este producto también está disponible con rebosadero*

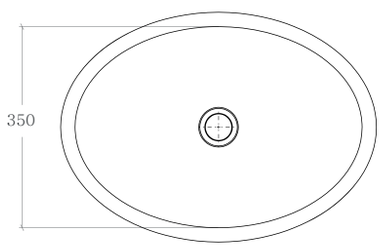

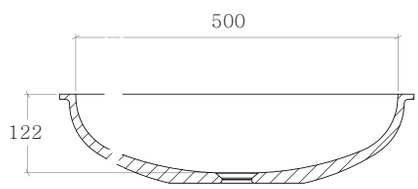

COIN D27 CP

Interior Measurements Medidas Interiores	(mm)	Ø 270x122
Weight Peso	(Kg)	3
Wall thickness Grosor paredes	(mm)	10
Colours Colores		Blanco Standard and Polar White

* Other shapes, sizes and colours can be produced by demand
* Otras formas, tamaños y colores pueden ser producidos bajo demanda

** This product is also available with overflow*
** Este producto también está disponible con rebosadero*

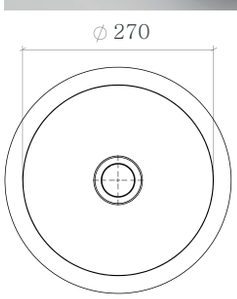

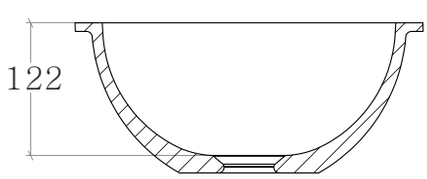

ROXTON

UNDER-MOUNTED BASINS/ PILETAS BAJO ENCIMERA

BATHROOM . BAÑO

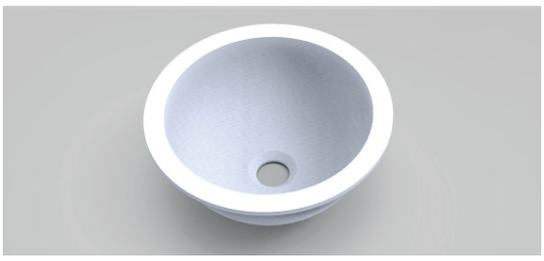

COIN D30 CP

Interior Measurements Medidas Interiores	(mm)	Ø 300x122
Weight Peso	(Kg)	3,5
Wall thickness Grosor paredes	(mm)	10
Colours Colores		Blanco Standard and Polar White

* Other shapes, sizes and colours can be produced by demand
* Otras formas, tamaños y colores pueden ser producidos bajo demanda

** This product is also available with overflow*
** Este producto también está disponible con rebosadero*

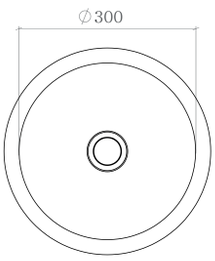

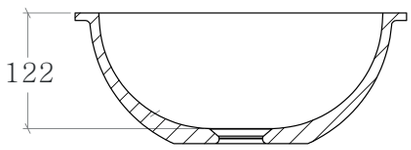

COIN D35 CP

Interior Measurements Medidas Interiores	(mm)	Ø 350x122
Weight Peso	(Kg)	4,85
Wall thickness Grosor paredes	(mm)	10
Colours Colores		Blanco Standard and Polar White

* Other shapes, sizes and colours can be produced by demand
* Otras formas, tamaños y colores pueden ser producidos bajo demanda

** This product is also available with overflow*
** Este producto también está disponible con rebosadero*

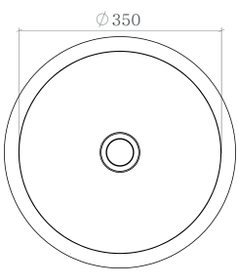

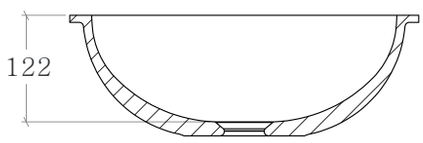

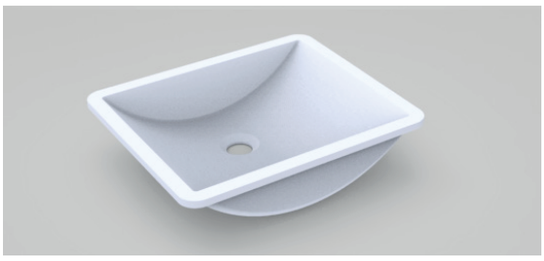

BEND 4033

Interior Measurements Medidas Interiores	(mm)	400x330x100
Weight Peso	(Kg)	4,5
Wall thickness Grosor paredes	(mm)	10
Colours Colores		Blanco Standard and Polar White

* Other shapes, sizes and colours can be produced by demand
* Otras formas, tamaños y colores pueden ser producidos bajo demanda

** This product is also available with overflow*
** Este producto también está disponible con rebosadero*

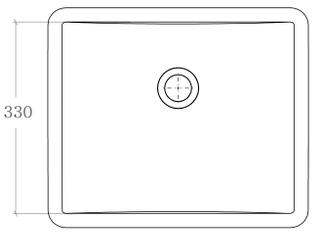

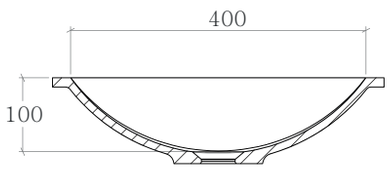

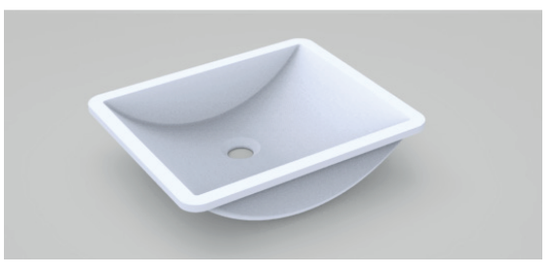

BEND 5033

Interior Measurements Medidas Interiores	(mm)	500X330x130
Weight Peso	(Kg)	5,8
Wall thickness Grosor paredes	(mm)	10
Colours Colores		Blanco Standard and Polar White

* Other shapes, sizes and colours can be produced by demand
* Otras formas, tamaños y colores pueden ser producidos bajo demanda

** This product is also available with overflow*
** Este producto también está disponible con rebosadero*

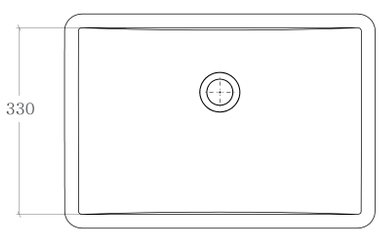

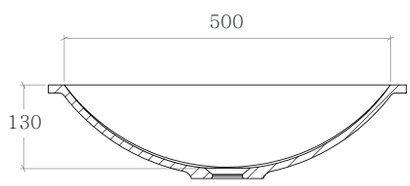

ROXTON

UNDER-MOUNTED BASINS/ PILETAS BAJO ENCIMERA

BATHROOM . BAÑO

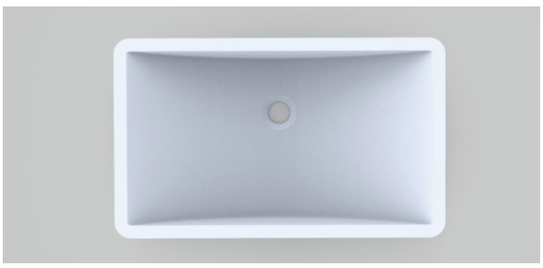

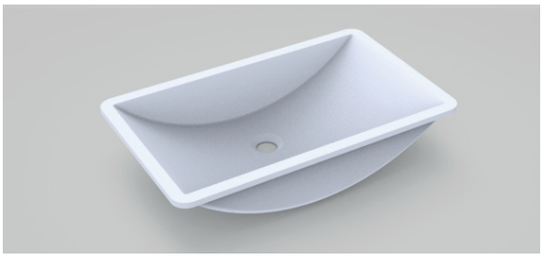

BEND 5833

Interior Measurements Medidas Interiores	(mm)	580x330x130
Weight Peso	(Kg)	6,5
Wall thickness Grosor paredes	(mm)	10
Colours Colores		Blanco Standard and Polar White

* Other shapes, sizes and colours can be produced by demand
* Otras formas, tamaños y colores pueden ser producidos bajo demanda

** This product is also available with overflow*
** Este producto también está disponible con rebosadero*

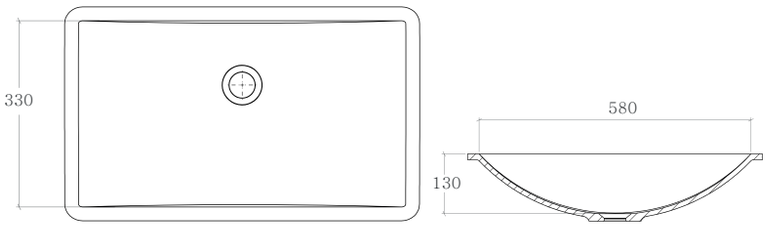

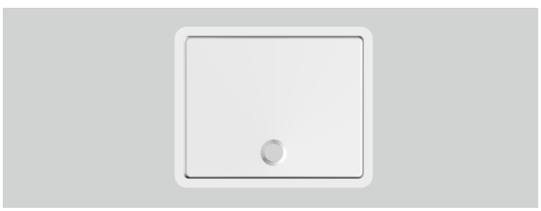

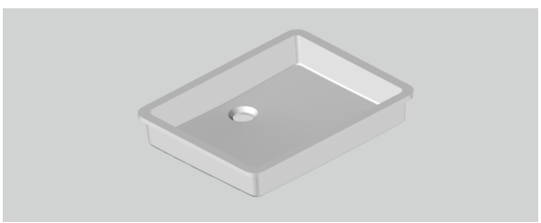

VYNKA 3545

Interior Measurements Medidas Interiores	(mm)	450x355x79
Weight Peso	(Kg)	6
Wall thickness Grosor paredes	(mm)	10
Colours Colores		Blanco Standard and Polar White

* Other shapes, sizes and colours can be produced by demand
* Otras formas, tamaños y colores pueden ser producidos bajo demanda

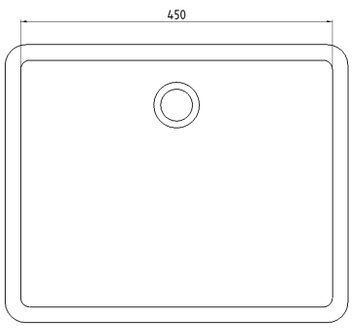

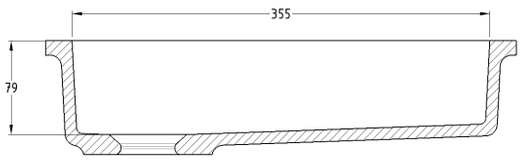

ROXTON

Bathroom
Baño

TOP-MOUNTED BASINS
PILETAS SOBRE ENCIMERA

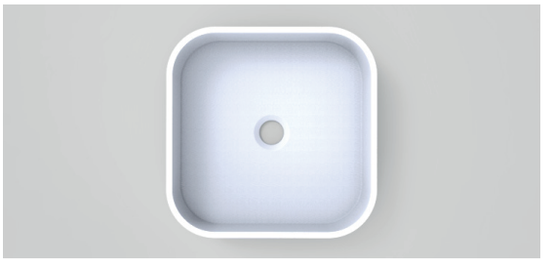

LAKE 3535 SP

Interior Measurements Medidas Interiores	(mm)	350x350x96
Exterior Measurements Medidas Exteriores	(mm)	370x370x112
Weight Peso	(Kg)	6,7
Wall thickness Grosor paredes	(mm)	10
Colours Colores		Blanco Standard and Polar White

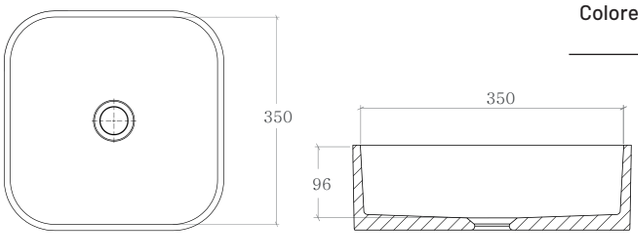

* Other shapes, sizes and colours can be produced by demand
* Otras formas, tamaños y colores pueden ser producidos bajo demanda

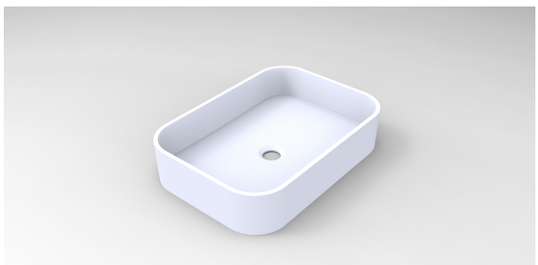

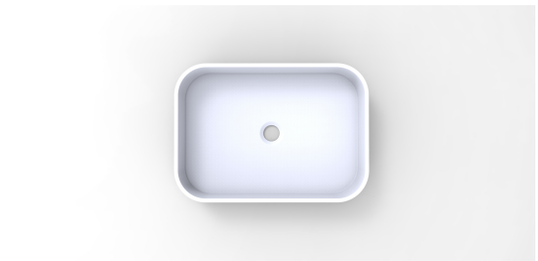

LAKE 3550 SP

Interior Measurements Medidas Interiores	(mm)	500x350x96
Exterior Measurements Medidas Exteriores	(mm)	520x370x112
Weight Peso	(Kg)	9,65
Wall thickness Grosor paredes	(mm)	10
Colours Colores		Blanco Standard and Polar White

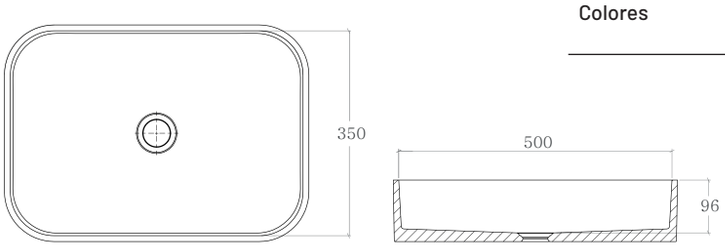

* Other shapes, sizes and colours can be produced by demand
* Otras formas, tamaños y colores pueden ser producidos bajo demanda

ROXTON

TOP-MOUNTED BASINS/ PILETAS SOBRE ENCIMERA

BATHROOM . BAÑO

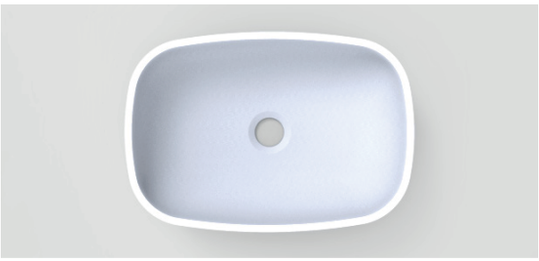

SOFT 2740 SP

Interior Measurements Medidas Interiores	(mm)	400x270x106
Exterior Measurements Medidas Exteriores	(mm)	420x290x122
Weight Peso	(Kg)	4,4
Wall thickness Grosor paredes	(mm)	10
Colours Colores		Blanco Standard and Polar White

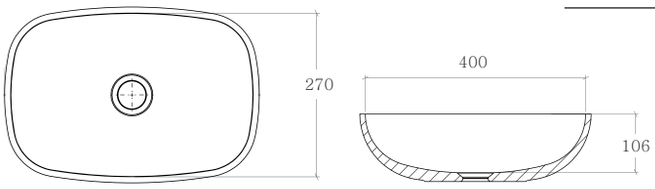

* Other shapes, sizes and colours can be produced by demand
* Otras formas, tamaños y colores pueden ser producidos bajo demanda

SOFT 3045 SP

Interior Measurements Medidas Interiores	(mm)	450x300x110
Exterior Measurements Medidas Exteriores	(mm)	470x320x122
Weight Peso	(Kg)	5,7
Wall thickness Grosor paredes	(mm)	10
Colours Colores		Blanco Standard and Polar White

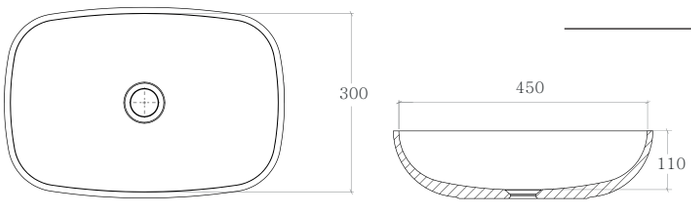

* Other shapes, sizes and colours can be produced by demand
* Otras formas, tamaños y colores pueden ser producidos bajo demanda

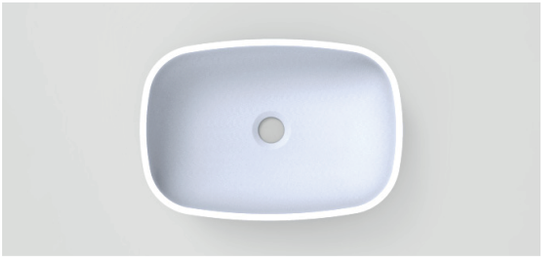

SOFT 3050 SP

Interior Measurements Medidas Interiores	(mm)	500x300x110
Exterior Measurements Medidas Exteriores	(mm)	520x320x122
Weight Peso	(Kg)	6,3
Wall thickness Grosor paredes	(mm)	10
Colours Colores		Blanco Standard and Polar White

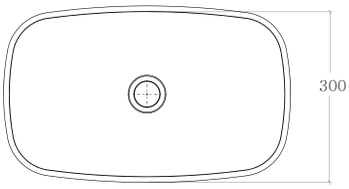

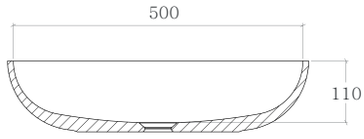

* Other shapes, sizes and colours can be produced by demand
* Otras formas, tamaños y colores pueden ser producidos bajo demanda

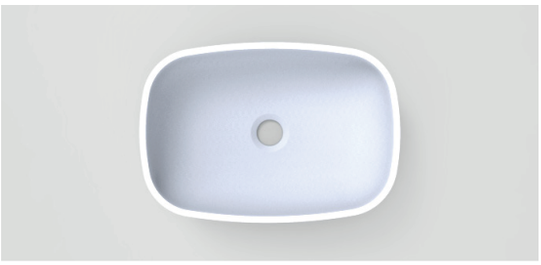

SOFT 3550 SP

Interior Measurements Medidas Interiores	(mm)	500x350x110
Exterior Measurements Medidas Exteriores	(mm)	520x370x122
Weight Peso	(Kg)	7,5
Wall thickness Grosor paredes	(mm)	10
Colours Colores		Blanco Standard and Polar White

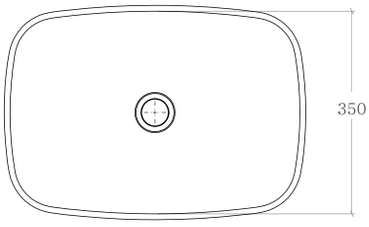

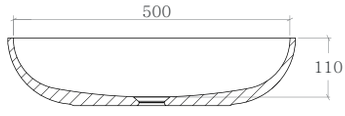

* Other shapes, sizes and colours can be produced by demand
* Otras formas, tamaños y colores pueden ser producidos bajo demanda

ROXTON

TOP-MOUNTED BASINS/ PILETAS SOBRE ENCIMERA

BATHROOM . BAÑO

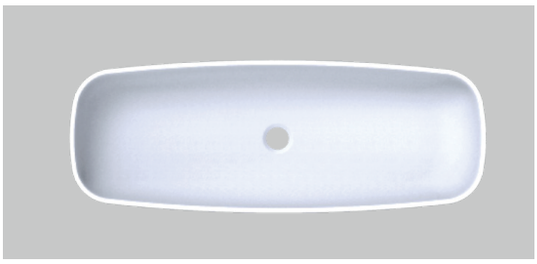

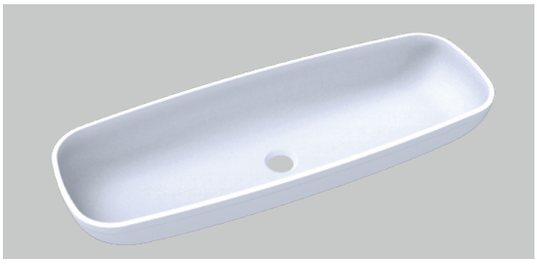

SOFT 3085 SP

Interior Measurements Medidas Interiores	(mm)	850x300x106
Exterior Measurements Medidas Exteriores	(mm)	870x320x122
Weight Peso	(Kg)	10,5
Wall thickness Grosor paredes	(mm)	10
Colours Colores		Blanco Standard and Polar White

* Other shapes, sizes and colours can be produced by demand
* Otras formas, tamaños y colores pueden ser producidos bajo demanda

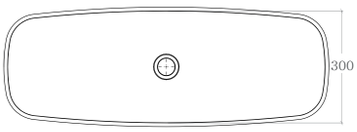

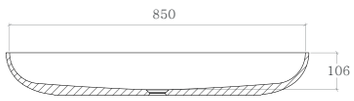

OVAL 2740 SP

Interior Measurements Medidas Interiores	(mm)	400x270x122
Exterior Measurements Medidas Exteriores	(mm)	420x290x138
Weight Peso	(Kg)	3,7
Wall thickness Grosor paredes	(mm)	10
Colours Colores		Blanco Standard and Polar White

* Other shapes, sizes and colours can be produced by demand
* Otras formas, tamaños y colores pueden ser producidos bajo demanda

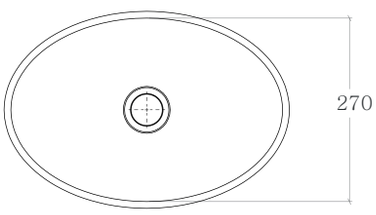

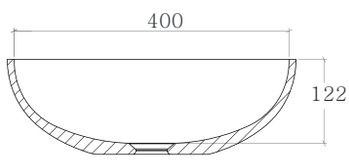

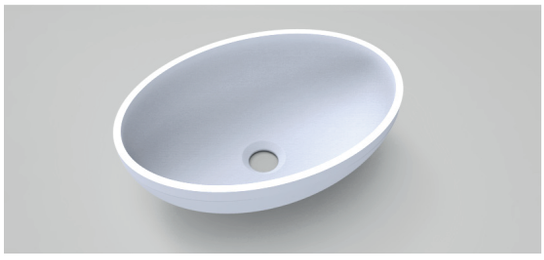

OVAL 3045 SP

Interior Measurements Medidas Interiores	(mm)	450x300x122
Exterior Measurements Medidas Exteriores	(mm)	470x320x138
Weight Peso	(Kg)	4,8
Wall thickness Grosor paredes	(mm)	10
Colours Colores		Blanco Standard and Polar White

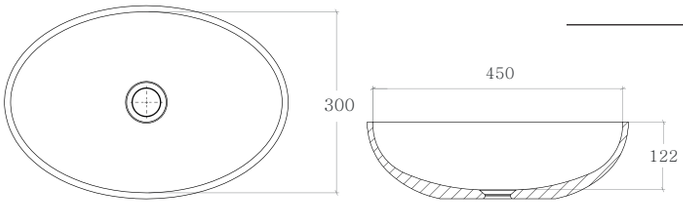

* Other shapes, sizes and colours can be produced by demand
* Otras formas, tamaños y colores pueden ser producidos bajo demanda

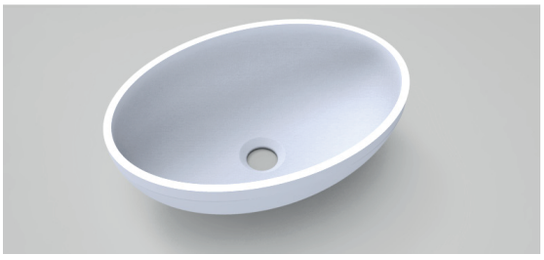

OVAL 3550 SP

Interior Measurements Medidas Interiores	(mm)	500x350x122
Exterior Measurements Medidas Exteriores	(mm)	520x370x138
Weight Peso	(Kg)	6,6
Wall thickness Grosor paredes	(mm)	10
Colours Colores		Blanco Standard and Polar White

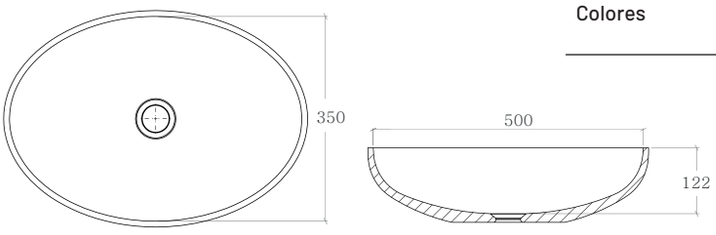

* Other shapes, sizes and colours can be produced by demand
* Otras formas, tamaños y colores pueden ser producidos bajo demanda

ROXTON

TOP-MOUNTED BASINS/ PILETAS SOBRE ENCIMERA

BATHROOM . BAÑO

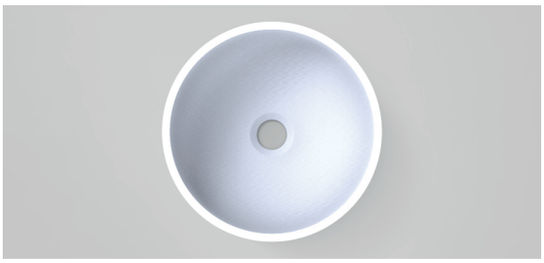

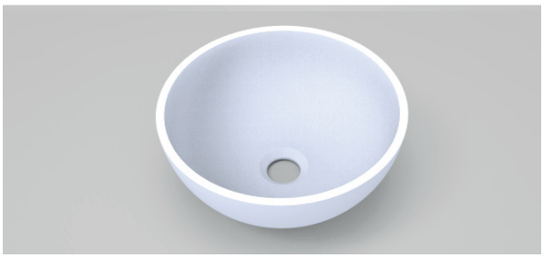

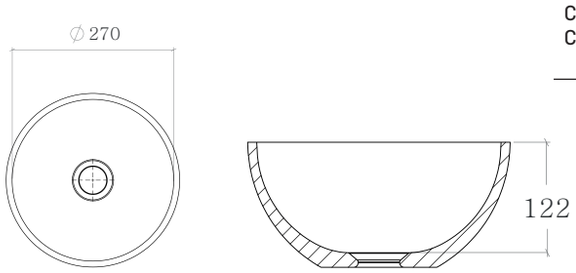

COIN D27 SP

Interior Measurements Medidas Interiores	(mm)	Ø 270x122
Exterior Measurements Medidas Exteriores	(mm)	Ø 290x138
Weight Peso	(Kg)	2,8
Wall thickness Grosor paredes	(mm)	10
Colours Colores		Blanco Standard and Polar White

* Other shapes, sizes and colours can be produced by demand
* Otras formas, tamaños y colores pueden ser producidos bajo demanda

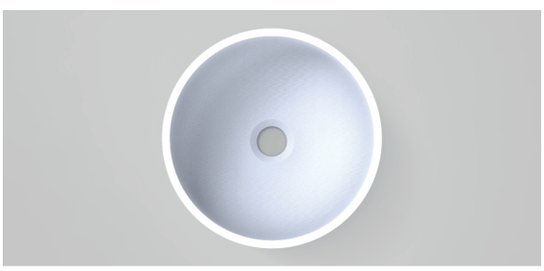

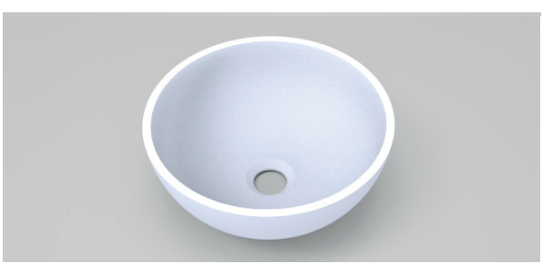

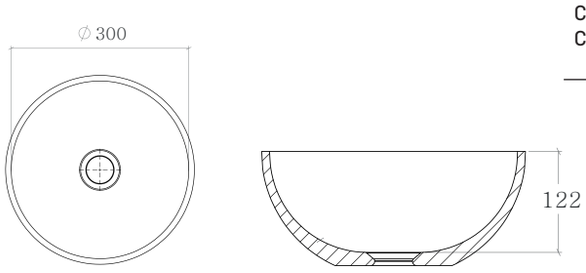

COIN D30 SP

Interior Measurements Medidas Interiores	(mm)	Ø 300x122
Exterior Measurements Medidas Exteriores	(mm)	Ø 320x138
Weight Peso	(Kg)	3,2
Wall thickness Grosor paredes	(mm)	10
Colours Colores		Blanco Standard and Polar White

* Other shapes, sizes and colours can be produced by demand
* Otras formas, tamaños y colores pueden ser producidos bajo demanda

ROXTON

TOP-MOUNTED BASINS/ PILETAS SOBRE ENCIMERA

BATHROOM . BAÑO

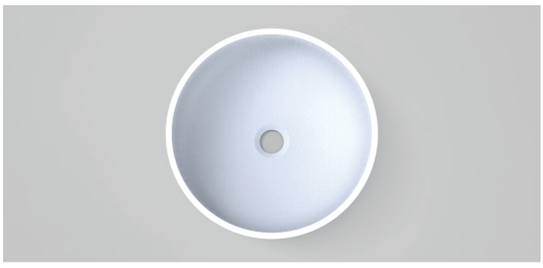

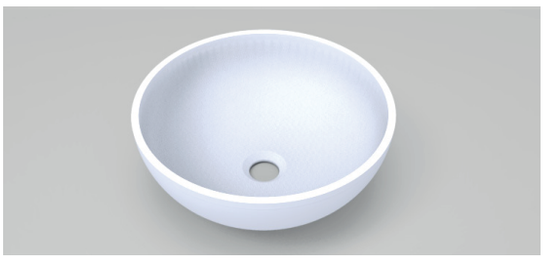

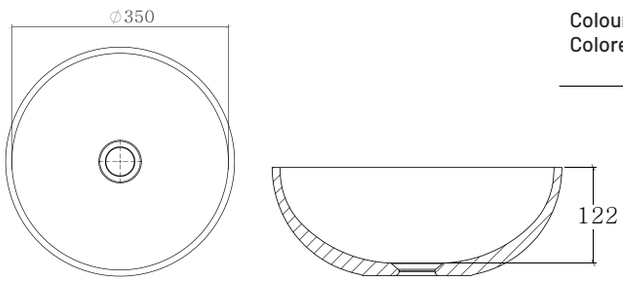

COIN D35 SP

Interior Measurements Medidas Interiores	(mm)	Ø 350x122
Exterior Measurements Medidas Exteriores	(mm)	Ø 370x138
Weight Peso	(Kg)	4,6
Wall thickness Grosor paredes	(mm)	10
Colours Colores		Blanco Standard and Polar White

* Other shapes, sizes and colours can be produced by demand
* Otras formas, tamaños y colores pueden ser producidos bajo demanda

ROXTON

Bathroom
Baño

BATHTUBS SHOWER TRAYS
BAÑERAS Y PLATOS DE DUCHA

BATHTUBS
BAÑERAS

BT RELAX

Bathtub with internal measures 1660 mm length x 660 mm width x 445 mm height mm made in Solid Surface 100% acrylic. Flanged Bathtub designed to integrate under a solid surface sheet or in a structure. This product performs under the European norm EN14516:2006 + A1:2010.

Bañera con medidas interiores 1660 mm de largo x 660 mm de ancho x 445 mm de alto, fabricada en Solid Surface 100% acrílico. Producto con pestaña diseñada para ser revestida con faldones o para ser integrada bajo placa. Este modelo cumple la normativa europea EN 14516:2006 + A1:2010.

BT ZEN

Freestanding bathtub with external measures 1675 mm length x 740 mm width x 450 mm height made in Solid Surface 100% acrylic. This product performs under the European norm EN 14516:2006 + A1:2010.

Bañera de medidas exteriores 1675 mm de largo x 740 mm de ancho x 450 mm de alto, fabricada en Solid Surface 100% acrílico. Bañera exenta, diseñada para colocar en isla. Este modelo cumple la normativa europea EN 14516:2006 + A1:2010.

BT BABY

Small bathtub with internal measures 620 mm length x 395 mm width x 280 mm height made in Solid Surface 100% acrylic. Designed for the new-born and babies. Flanged bathtub designed to integrate on a solid surface sheet or structure. This product performs under the European norm EN14516:2006 + A1:2010.

Bañera pequeña, fabricada en Solid Surface 100% acrílico de dimensiones interiores 620 mm de largo x 395 mm de ancho x 280 mm de alto. Ideal para neonatos y bebés. Con pestaña, pensada para ser revestida con faldones o para ser integrada bajo placa. Este modelo cumple la normativa europea EN 14516:2006 + A1:2010.

ROXTON

BATHTUBS/ BAÑERAS

BATHROOM . BAÑO

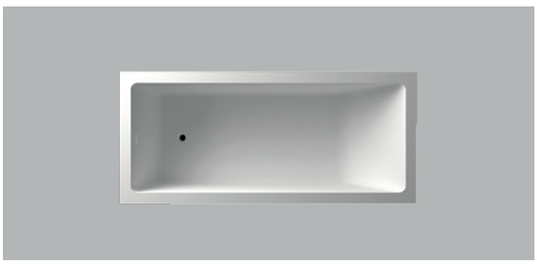

BT RELAX

Interior Measurements Medidas Interiores	(mm)	1660x660x445
Weight Peso	(Kg)	85
Wall thickness Grosor paredes	(mm)	10
Colours Colores		Blanco Standard and Polar White

* Other shapes, sizes and colours can be produced by demand
* Otras formas, tamaños y colores pueden ser producidos bajo demanda

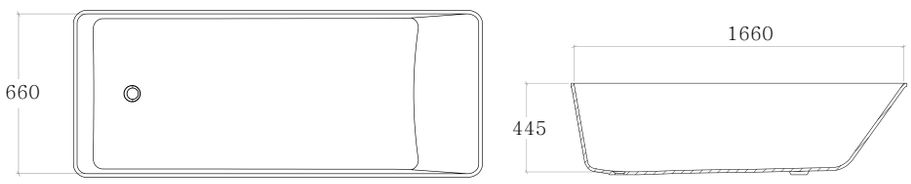

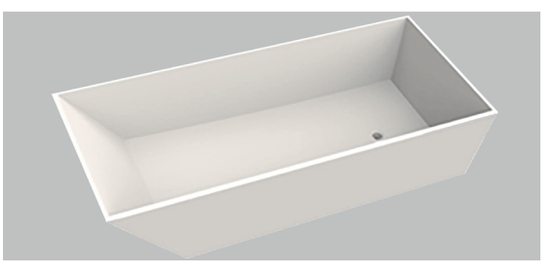

BT ZEN

Interior Measurements Medidas Interiores	(mm)	1612x686x400
Exterior Measurements Medidas Exteriores	(mm)	1675x740x450
Weight Peso	(Kg)	115
Wall thickness Grosor paredes	(mm)	10
Colours Colores		Blanco Standard and Polar White

* Other shapes, sizes and colours can be produced by demand
* Otras formas, tamaños y colores pueden ser producidos bajo demanda

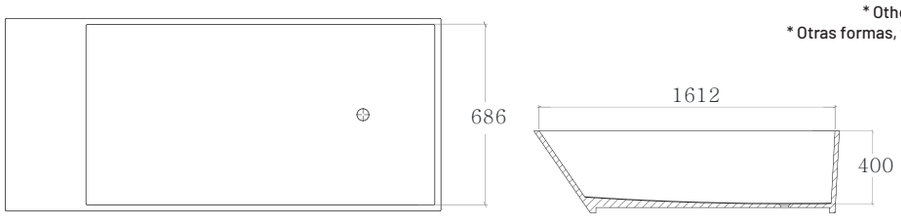

ROXTON

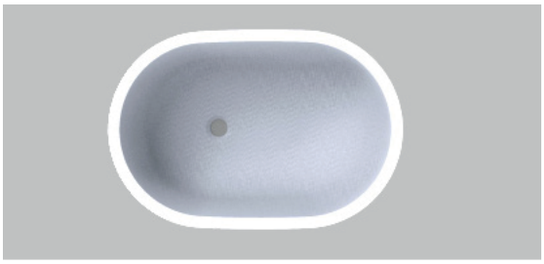

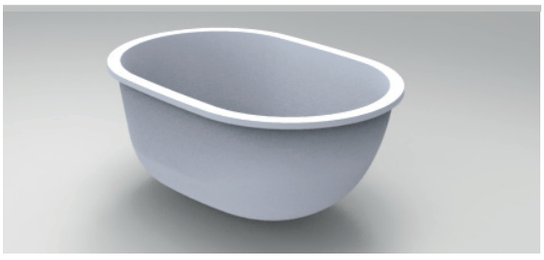

BT BABY

Interior Measurements Medidas Interiores	(mm)	620x395x280
Weight Peso	(Kg)	13
Wall thickness Grosor paredes	(mm)	12
Colours Colores		Blanco Standard and Polar White

* Other shapes, sizes and colours can be produced by demand
* Otras formas, tamaños y colores pueden ser producidos bajo demanda

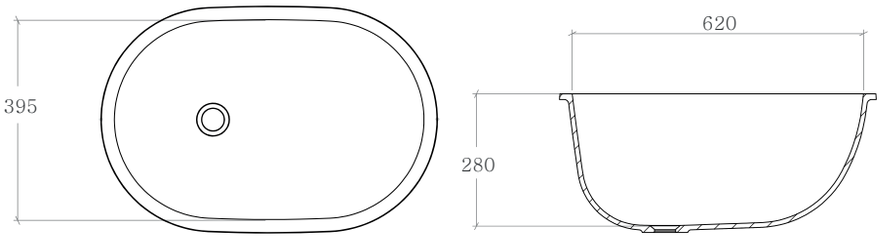

SHOWER TRAYS
PLATOS DE DUCHA

HARMONY

Shower trays to integrate made in Solid Surface 100% acrylic. Flanged model designed to be installed in solid surface or similar. These products perform under the European norm EN 14527:2006 + A1:2010.

Plato de ducha integrable fabricado en Solid Surface 100% acrílico. Con pestaña, pensado para adquirirlo con o sin zona de secado. Estos modelos cumplen la normativa europea EN 14527:2006 + A1:2010.

DOVE

Water picker with external measures 710 mm length x 710 mm width x 75 mm height designed to integrate under a plate. Made in Solid Surface 100% acrylic. Ocult water drainage slot gives this shower tray a minimalist appearance. This product performs under the European norm EN 14527:2006 +A1:2010.

Recogedor de agua de medidas exteriores 710 mm de largo x 710 mm de ancho x 75 mm de alto, pensado para ser integrado bajo placa. Fabricado en Solid Surface 100% acrílico. Con desagüe oculto, este plato de ducha presenta un modelo minimalista. Este modelo cumple la normativa europea EN 14527:2006 + A1:2010.

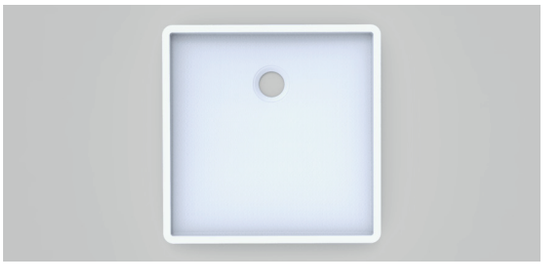

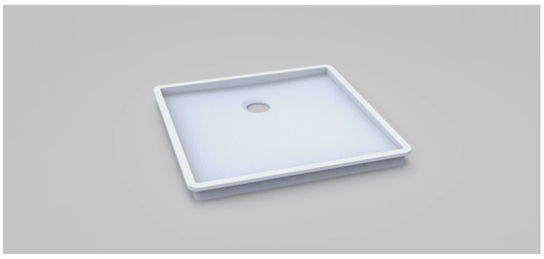

HARMONY F70

Interior Measurements Medidas Interiores	(mm)	700x700x41
Weight Peso	(Kg)	25,5
Wall thickness Grosor paredes	(mm)	10
Colours Colores		Blanco Standard and Polar White

* Other shapes, sizes and colours can be produced by demand
* Otras formas, tamaños y colores pueden ser producidos bajo demanda

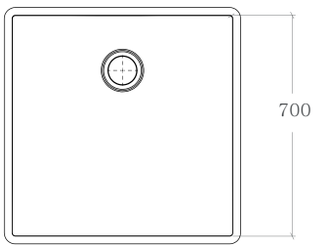

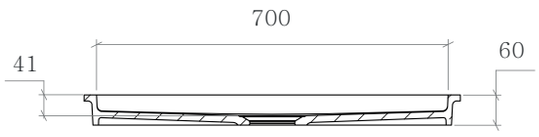

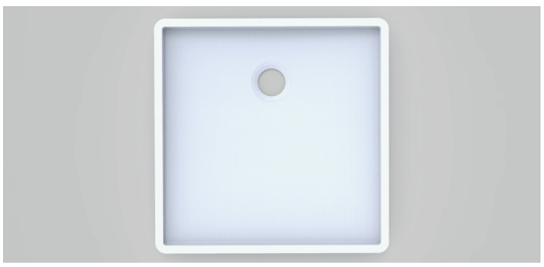

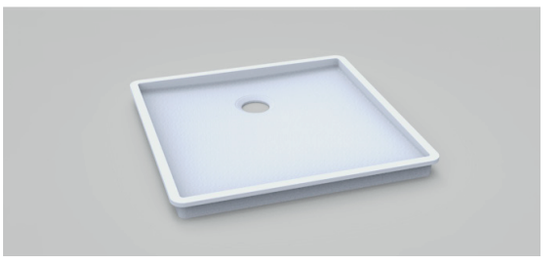

HARMONY F80

Interior Measurements Medidas Interiores	(mm)	800x800x41
Weight Peso	(Kg)	28,6
Wall thickness Grosor paredes	(mm)	10
Colours Colores		Blanco Standard and Polar White

* Other shapes, sizes and colours can be produced by demand
* Otras formas, tamaños y colores pueden ser producidos bajo demanda

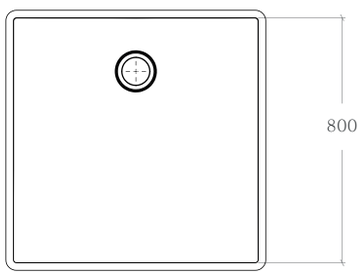

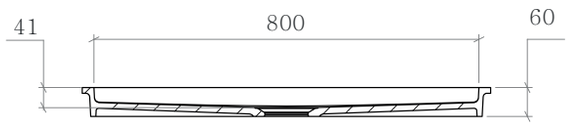

ROXTON

SHOWER TRAYS/ PLATOS DE DUCHA

BATHROOM . BAÑO

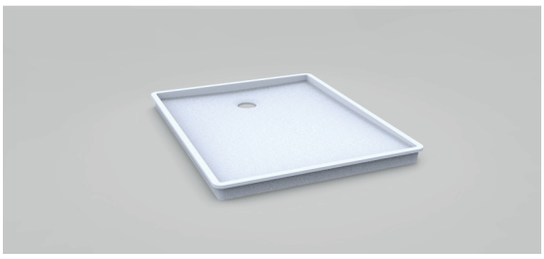

HARMONY F100

Interior Measurements Medidas Interiores	(mm)	1000x800x47
Weight Peso	(Kg)	35,2
Wall thickness Grosor paredes	(mm)	10
Colours Colores		Blanco Standard and Polar White

* Other shapes, sizes and colours can be produced by demand
* Otras formas, tamaños y colores pueden ser producidos bajo demanda

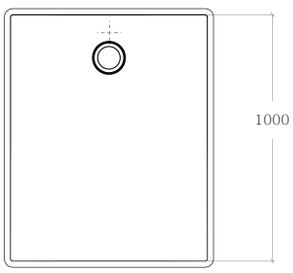

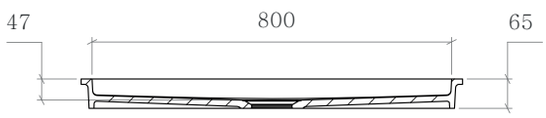

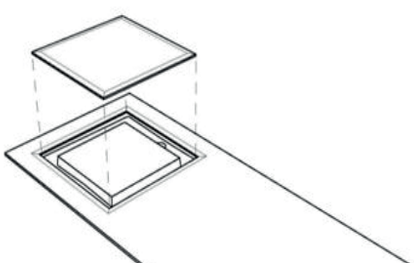

DOVE

Interior Measurements Medidas Interiores	(mm)	657x657x75
Exterior Measurements Medidas Exteriores	(mm)	710x710x75
Weight Peso	(Kg)	16,88
Wall thickness Grosor paredes	(mm)	10
Colours Colores		Blanco Standard and Polar White

* Other shapes, sizes and colours can be produced by demand
* Otras formas, tamaños y colores pueden ser producidos bajo demanda

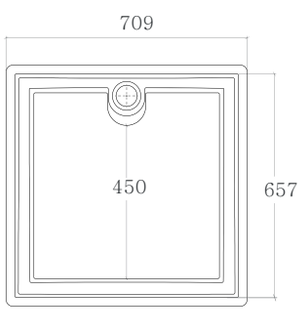

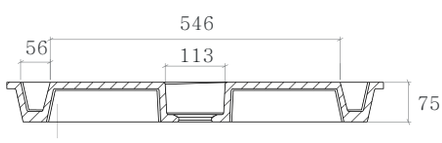

ROXTON

COIN D30

OVAL 3045

CERTIFICATES AND MAINTENANCE
CERTIFICACIONES Y MANTENIMIENTO

OUR SOLID SURFACE

- 100% acrylic.
- Whites do not yellow over time all our colours remain stable.
- Combines mineral hardness with ductility of the resin.
- It is solid, durable and does not contain allergenic substances or other harmful ingredients.
- Resists stains and scratches and in case of damage it can be repaired and restored easily.
- Easy maintenance and cleaning.
- Non-porous material with build-up. Maximum hygiene.
- Ideal for use both indoors and outdoors.
- CE/UKCA.

*With the collaboration of the Instituto Tecnológico de la Cerámica (ITC), a comparative study of accelerated aging has been carried out between a polyester sample from the market and our 100% acrylic Solits® material, to determine the long-term color stability of both samples.

While the polyester sample showed a visual color change after 72 hours of testing (approximately 1 and a half real months), our 100% acrylic Solits® material did not show any color change after 600 hours of testing (more than 1 real year and 2 months).

The results simply confirm the yellowing problem of polyester compared to our 100% acrylic Solits® material which does not change its color tone over time.

Material	ΔE^*_{CMC}
Poliéster	8,4
Solits®	0,2

ΔE*CMC: Color differences compared to the start of the test.
Must be less than 1,0 according to UNE EN 14411:2016 so that isn't visually noticeable.

NUESTRO SOLID SURFACE

- 100% acrílico.
- Los blancos no amarillean con el paso del tiempo y sus colores son totalmente estables *.
- Combina la dureza del mineral con la ductilidad de la resina.
- Es sólido, duradero y no contiene sustancias alergénicas u otros ingredientes nocivos.
- Resiste manchas y arañazos y en caso de daño puede ser reparado fácilmente.
- Es de fácil mantenimiento y limpieza.
- Máxima higiene. Material no poroso.
- Ideal para uso en interiores y exteriores.
- Marcado CE/UKCA.

*Con la colaboración del instituto tecnológico de la cerámica (ITC), se ha hecho un estudio comparativo de un envejecimiento acelerado entre una muestra de poliéster del mercado y nuestro material 100% acrílico Solits®, para determinar la estabilidad de color de ambas muestras a largo plazo.
Mientras que a la muestra de poliéster se le puede apreciar visualmente cambio de color a las 72 horas de ensayo (aproximadamente 1 mes y medio real), a nuestro material 100% acrílico Solits®, no se le aprecia cambio de color a las 600 horas de ensayo (más de 1 año y 2 meses reales).
Los resultados no hacen más que confirmar el problema de amarilleamiento que tiene el poliéster respecto a nuestro material 100% acrílico Solits® que no varía su tono de color a lo largo del tiempo.

Material	ΔE^*_{CMC}
Poliéster	8,4
Solits®	0,2

ΔE*CMC: Diferencias de color respecto al inicio del ensayo.
Debe ser menor a 1,0 según norma UNE EN 14411:2016 para que no se aprecie visualmente.

QUALITY CERTIFICATIONS

A. INTRINSIC MATERIAL QUALITY

Description	Status	Norm
Color consistency	Valid	UNE-EN ISO 19712-1
Dry heat (180°C) resistance – Appearance (evaluation)	5	UNE-EN ISO 19712-1
Dry heat (180°C) resistance – Deffects (evaluation)	No defects	UNE-EN ISO 19712-1
Humid heat (100°C) resistance (evaluation)	5	UNE-EN ISO 19712-1
Light resistance (gray scale evaluation)	5	UNE-EN ISO 19712-1
Load test (evaluation)	No defects (Deflection < 0,10 mm)	UNE-EN ISO 19712-1
Impact resistance of a large diameter ball	Correct	UNE-EN ISO 19712-1
Surface test (aspect)	No defects observed	UNE-EN ISO 19712-1
Resistance to cigarette burns (evaluation)	5	UNE-EN ISO 19712-1
Stain resistance (evaluation)	5	UNE-EN ISO 19712-1
Suitability of the material for Hospitals (Stains, Cleaning, Hygiene and Resistance)	Valid	Several
Suitable for food contact - Regulation VO. (EC) No. 10/2011	Valid	EN 1186

(**) Results from 1 to 5 being 5 the best result possible

B. BATHROOM LINE

Description	Status	Norm
Bathroom line products. Functional Requirements and Trial Methods (CE Certificate)	Conformant	UNE-EN 14688:2016+A1:2019
Load stability	Pass	UNE-EN 14688:2016 (5.2)
Water evacuation	Pass	UNE-EN 14688:2016 (5.3)
Resistance to temperature changes	No surface deterioration - Pass	UNE-EN 14688:2016 (5.4)
Chemical and colouring agents resistance	No surface deterioration - Pass	UNE-EN 14688:2016 (5.5)
Surface stability - Scratching	Not applicable	UNE-EN 14688:2016 (5.6)
Surface stability - Abrasion	Not applicable	UNE-EN 14688:2016 (5.7)
Fitness for cleaning	Pass	UNE-EN 14688:2016 (5.8)
Protection against overflow	No overflow – CL00	UNE-EN 14688:2016 (5.9)
Durability	Durable	UNE-EN 14688:2016 (4.8)

C. KITCHEN LINE

Description	Status	Norm
Kitchen sinks, Functional Requirements and Trial Methods (CE Certificate)	Conformant	UNE-EN 13310:2016+A1:2019
Draining of water	Pass	UNE-EN 13310:2016 (5.2)
Resistance to dry heat	Pass	UNE-EN 13310:2016 (5.3)
Resistance to temperature changes	Pass	UNE-EN 13310:2016 (5.4)
Resistance to chemicals and staining agents	Pass	UNE-EN 13310:2016 (5.5)
Resistance to scratching	Not applicable	UNE-EN 13310:2016 (5.6)
Resistance to abrasion	Not applicable	UNE-EN 13310:2016 (5.7)
Load stability	Not applicable	UNE-EN 13310:2016 (5.8)
Determination of flow rate of overflow	Pass	UNE-EN 13310:2016 (5.9)
Durability	Durable	UNE-EN 13310:2016 (4.10)

ROXTON

QUALITY CERTIFICATIONS

CE

ISO

ICDQ SPAIN

UK CA

AICE jtc UNIVERSITAT JAUME·I

AIDIMME INSTITUTO TECNOLÓGICO

ROXTON

MAINTENANCE AND CARE

Our products can be easily maintained as they do not absorb liquids. Clean recent stains or spills with a sponge moistened with warm water. Stains:

	Procedure
Vinegar, coffee, the, juice, vegetables, hair dye, ketchup, shoe polish cream, ink, marker, iodine, fungus, pollen, saffron, superficial scratches, cigarette burnings, fats, oil, residues, blood, wine, perfume, e namel, polish, oxide and iron marks.	a-b-c
Water lime, soap and minerals	d

a. Apply a slightly abrasive cream with a moistened cloth and rub it with a sponge.

b. Use a sponge to rub the stain with a slightly abrasive cream and some bleach. Rinse it with warm water and dry it with a soft cloth.

c. Use a sponge to rub the stain with a slightly abrasive cream and acetone. Rinse it with warm water and dry it with a soft cloth.

d. Use a sponge to rub the stain with a slightly abrasive cream and an anti-lime product. Rinse it with warm water and dry it with a soft cloth.

MANTENIMIENTO Y CUIDADO

Nuestros productos son realmente fáciles de mantener. No absorben líquidos. En caso de manchas o salpicaduras recientes pasar una esponja humedecida con agua caliente.

	Procedimiento
Vinagre, cafe, té, zumos, verduras tintes de pelo, kétchup, crema de zapatos, tinta, rotulador, yodo, hongos,polen, azafrán, arañazos superficiales, quemaduras de cigarrillos, grasas, residuos de aceite, sangre, vino, colonias, perfumes, esmaltes, hierro y óxido.	a-b-c
Cal de agua, jabón, minerales	d

a. Aplicar crema ligeramente abrasiva con un paño húmedo y frotar con una esponja

b. Frotar la mancha con esponja abrasiva y un poco de lejía. Aclarar con agua caliente y secar con un trapo suave.

c. Frotar la mancha con una esponja abrasiva con acetona. Aclarar con agua caliente y secar con un trapo suave.

d. Frotar la mancha con esponja abrasiva y con producto anti-cal. Aclarar con agua caliente y aclarar con un trapo suave.

ROXTON

TOP MOUNT COLLECTION

ENKEI TOP **8001**

Finishes:
MOON WHITE

Standard drain (not included)

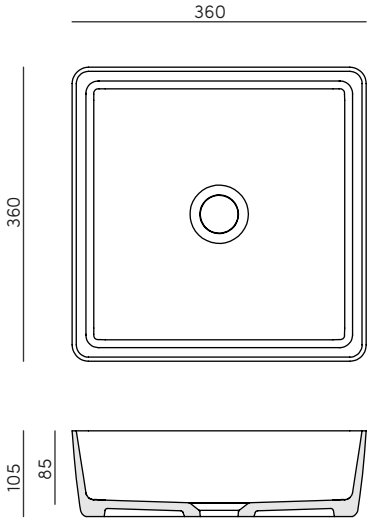

ext. - **360x360x105 mm**
int. - **350x350x85 mm**

ENKEI TOP **8002**

Finishes:
MOON WHITE

Standard drain (not included)

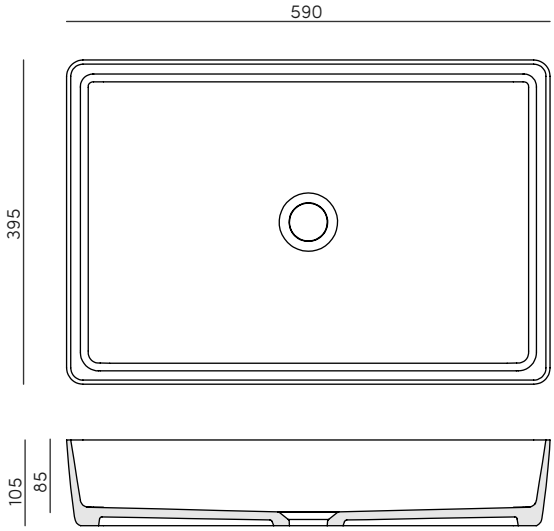

ext. - **590x395x105 mm**
int. - **580x385x85 mm**

ENKEI TOP **8003**

Finishes:
MOON WHITE

Standard drain (not included)

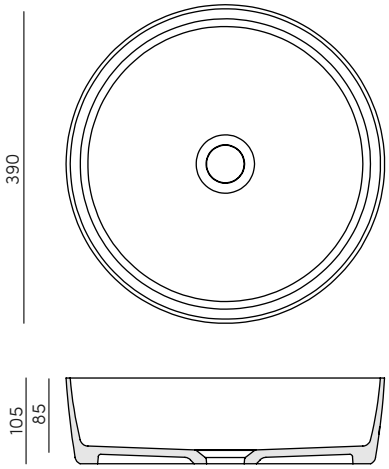

ext. - **Ø390x105 mm**
int. - **Ø380x85 mm**

ENKEI TOP **8004**

Finishes:
MOON WHITE

Standard drain (not included)

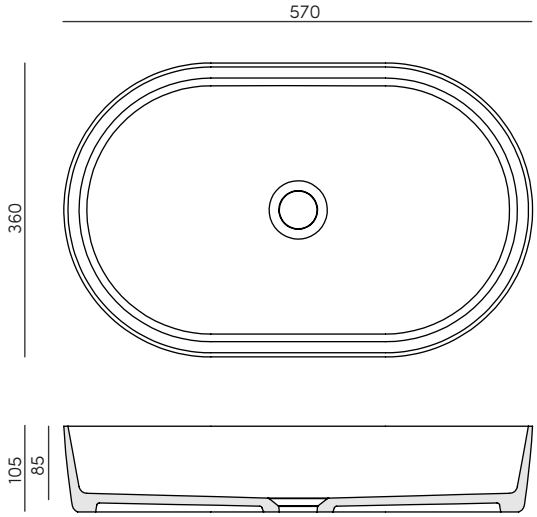

ext. - **570x360x105 mm**
int. - **560x350x85 mm**

SHIRO TOP **1301**

Finishes:
MOON WHITE

Only with valve **Ref. WVL.3001** (not included)

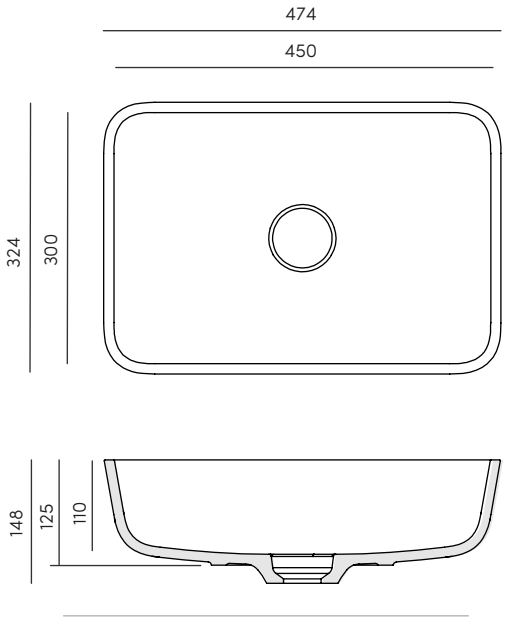

ext. - **474x324x148 mm**
int. - **450x300x110 mm**

SHIRO TOP **1311**

Finishes:
MOON WHITE

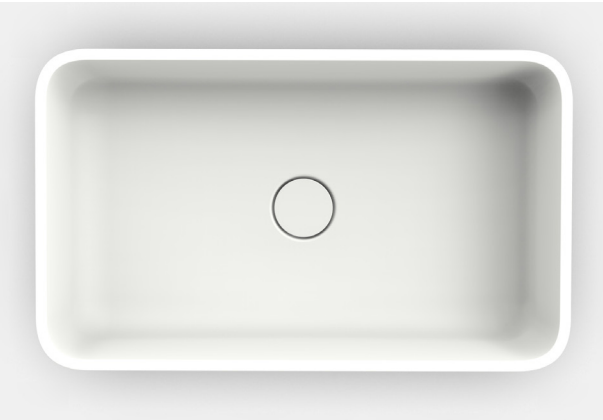

Only with valve **Ref. WVL.3001** (not included)

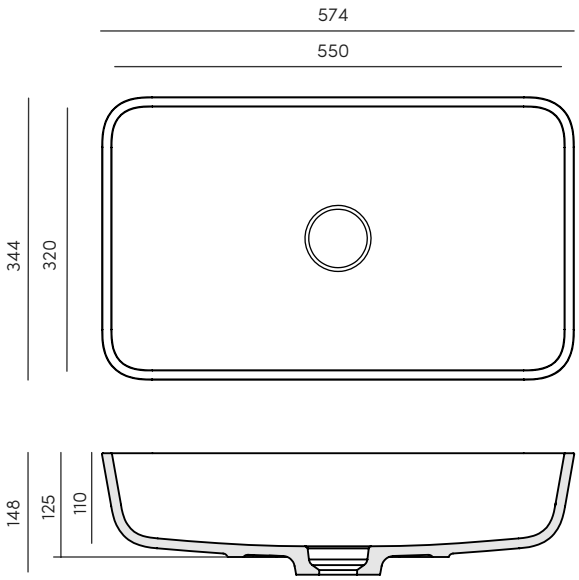

ext. - **574x344x148 mm**
int. - **550x320x110 mm**

SHIRO TOP **1331**

Finishes:
MOON WHITE

Only with valve **Ref. WVL.3001** (not included)

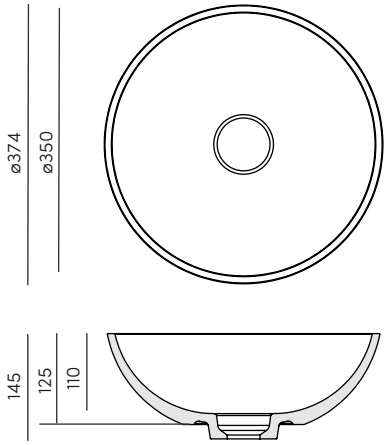

ext. - **Ø374x148 mm**
int. - **Ø350x110 mm**

SHIRO TOP **1341**

Finishes:
MOON WHITE

Only with valve **Ref. WVL.3001** (not included)

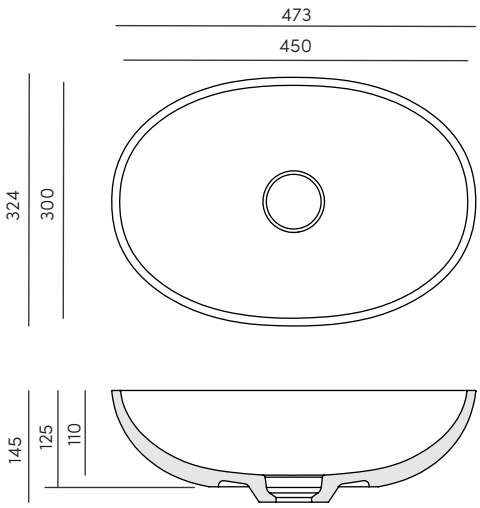

ext. - **473x324x145 mm**
int. - **450x300x110 mm**

SHIRO TOP **1504**

Finishes:
MOON WHITE

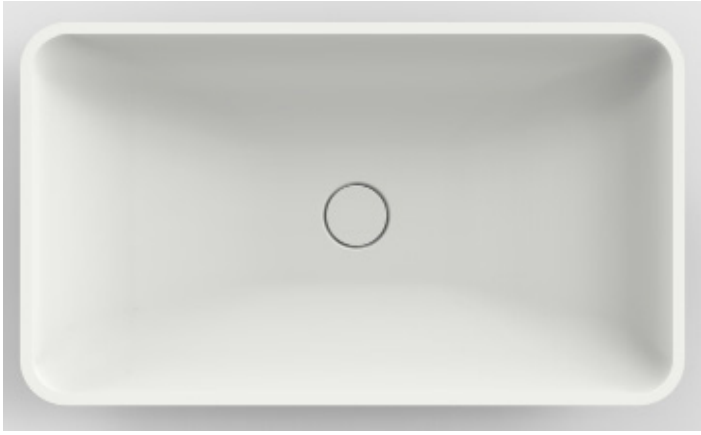

Only with valve **Ref. WVL.3001** (not included)

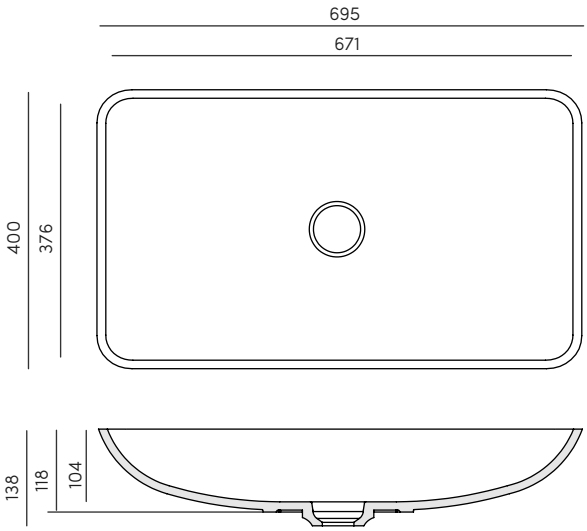

ext. - **695x400x138 mm**
int. - **671x376x104 mm**

SHIRO TOP **1303**

Finishes:
MOON WHITE

Only with valve **Ref. WVL.3001** (not included)

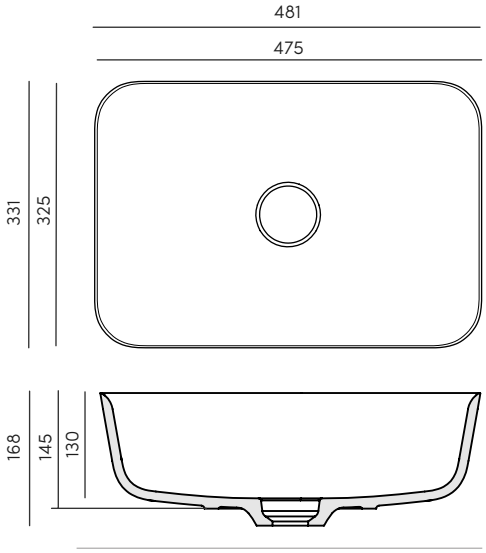

ext. - **481x331x168 mm**
int. - **475x325x130 mm**

SHIRO TOP **1313**

Finishes:
MOON WHITE

Only with valve **Ref. WVL.3001** (not included)

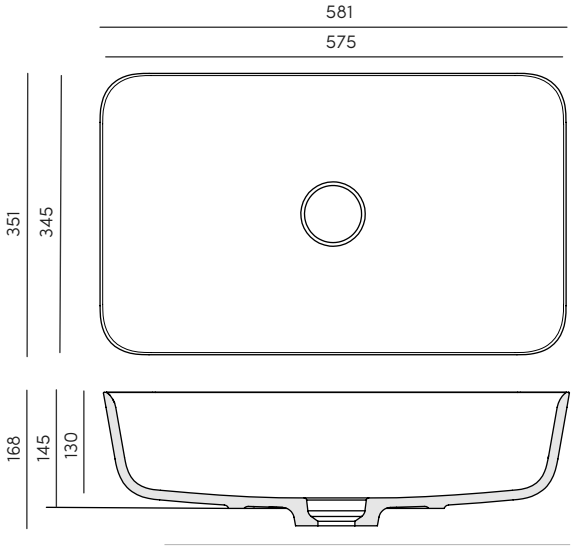

ext. - **581x351x168 mm**
int. - **575x345x130 mm**

SHIRO TOP **1333**

Finishes:
MOON WHITE

Only with valve **Ref. WVL.3001** (not included)

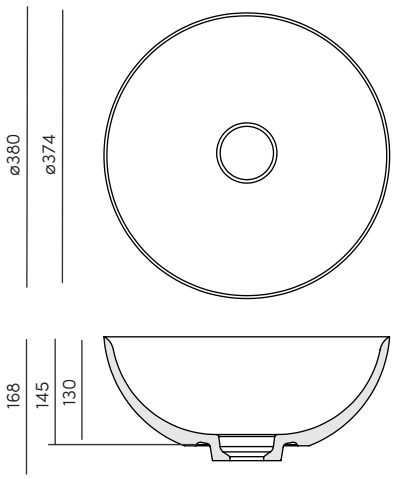

ext. - **Ø380x168 mm**
int. - **Ø374x130 mm**

SHIRO TOP **1343**

Finishes:
MOON WHITE

Only with valve **Ref. WVL.3001** (not included)

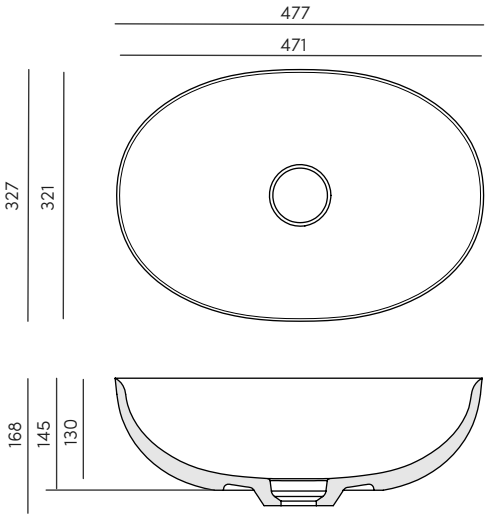

ext. - **477x327x168 mm**
int. - **471x321x130 mm**

SHIRO TOP **1302**

Finishes:
MOON WHITE

Only with valve **Ref. WVL.3001** (not included)

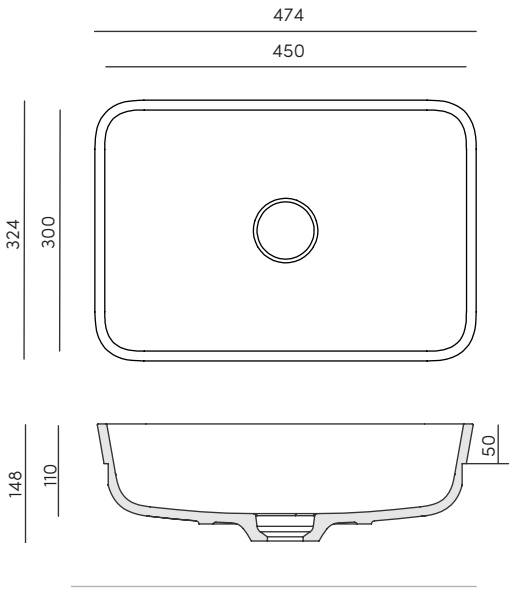

ext. - **474x324x148 mm**
int. - **450x300x110 mm**

SHIRO TOP **1312**

Finishes:
MOON WHITE

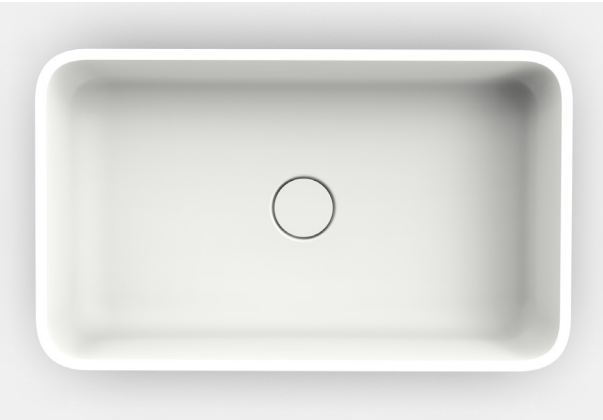

Only with valve **Ref. WVL.3001** (not included)

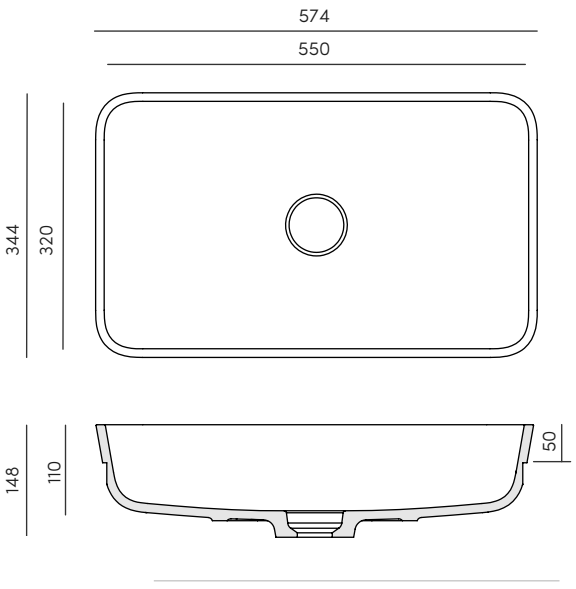

ext. - **574x344x148 mm**
int. - **550x320x110 mm**

SHIRO TOP **1332**

Finishes:
MOON WHITE

Only with valve **Ref. WVL.3001** (not included)

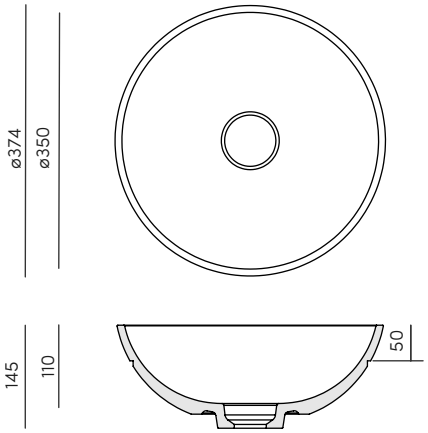

ext. - **Ø374x148 mm**
int. - **Ø350x110 mm**

SHIRO TOP **1342**

Finishes:
MOON WHITE

Only with valve **Ref. WVL.3001** (not included)

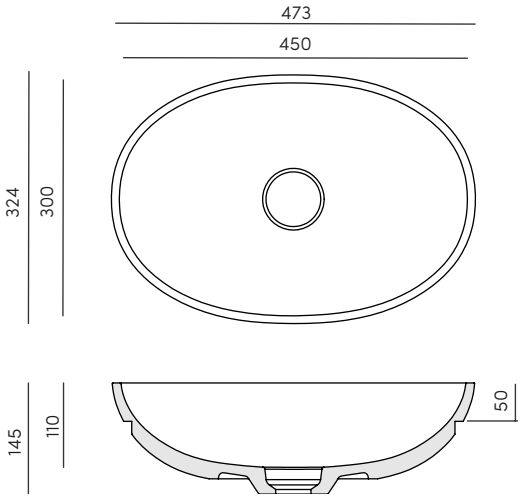

ext. - **473x324x145 mm**
int. - **450x300x110 mm**

SHIRO TOP **1303**

Finishes:
MOON WHITE

Only with valve **Ref. WVL.3001** (not included)

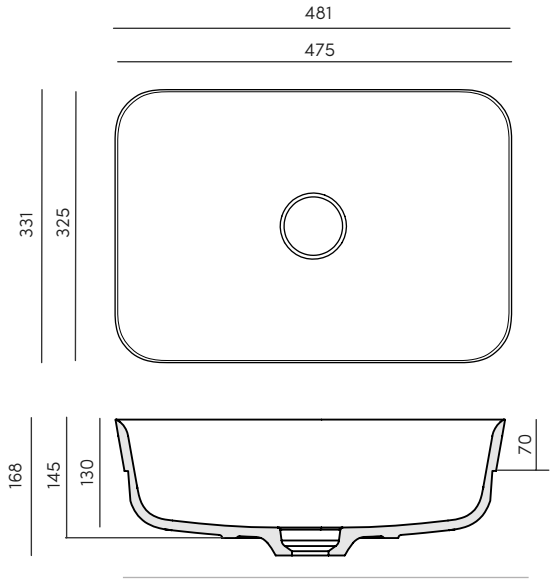

ext. - **474x324x148 mm**
int. - **450x300x110 mm**

SHIRO TOP **1313**

Finishes:
MOON WHITE

Only with valve **Ref. WVL.3001** (not included)

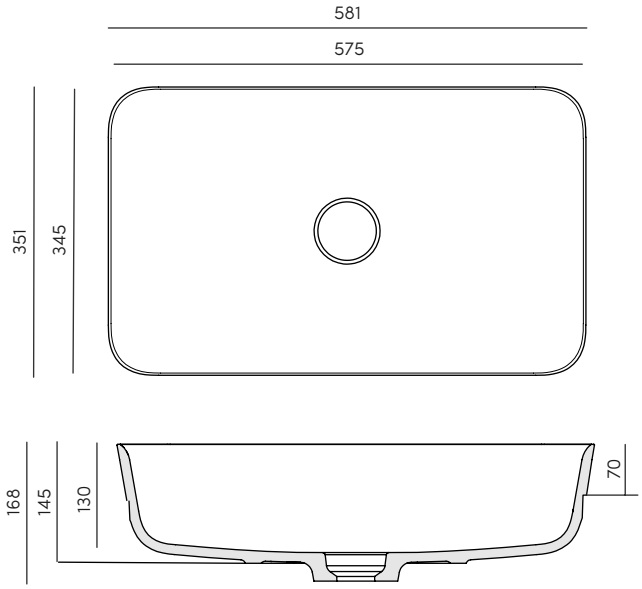

ext. - **574x344x148 mm**
int. - **550x320x110 mm**

SHIRO TOP **1333**

Finishes:
MOON WHITE

Only with valve **Ref. WVL.3001** (not included)

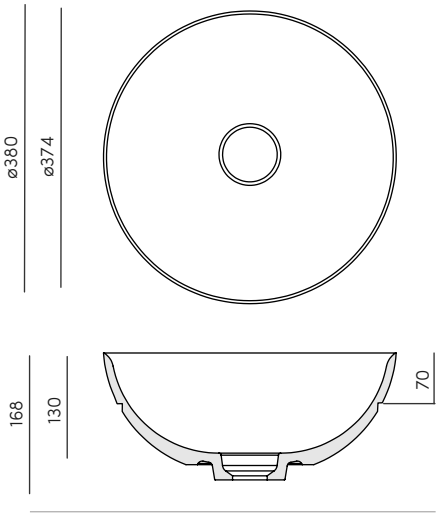

ext. - **Ø374x148 mm**
int. - **Ø350x110 mm**

SHIRO TOP **1343**

Finishes:
MOON WHITE

Only with valve **Ref. WVL.3001** (not included)

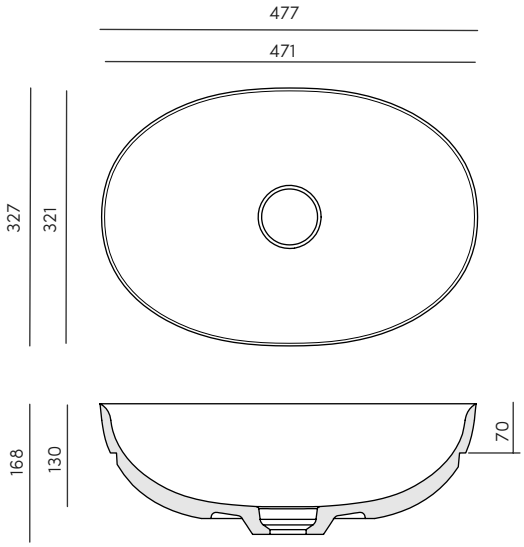

ext. - **473x324x145 mm**
int. - **450x300x110 mm**

KĀBU TOP **1001**

Finishes:
MOON WHITE

Valve not included.
Drain cover included.

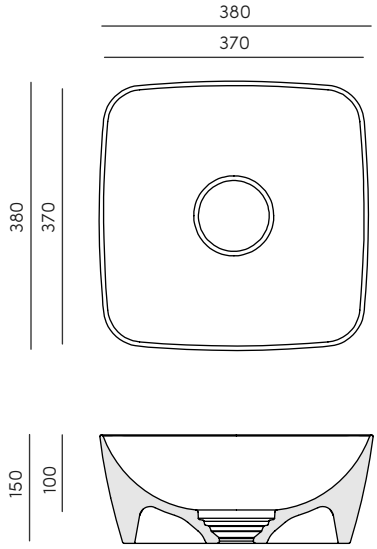

ext. - **380x380x150 mm**
int. - **370x370x100 mm**

KĀBU TOP **1002**

Finishes:
MOON WHITE

Valve not included.
Drain cover included.

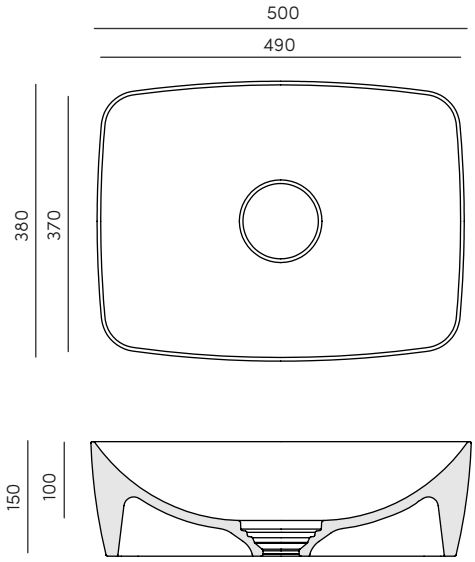

ext. - **500x380x150 mm**
int. - **490x370x100 mm**

KĀBU TOP **1003**

Finishes:
MOON WHITE

Valve not included.
Drain cover included.

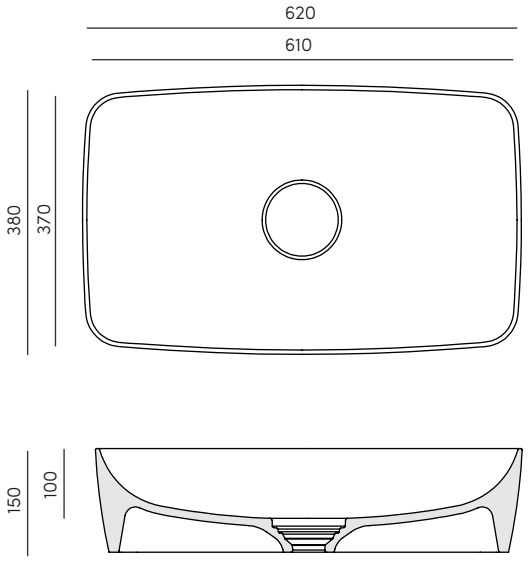

ext. - **620x380x150 mm**
int. - **610x370x100 mm**

KĀBU TOP **1004**

Finishes:
MOON WHITE

Valve not included.
Drain cover included.

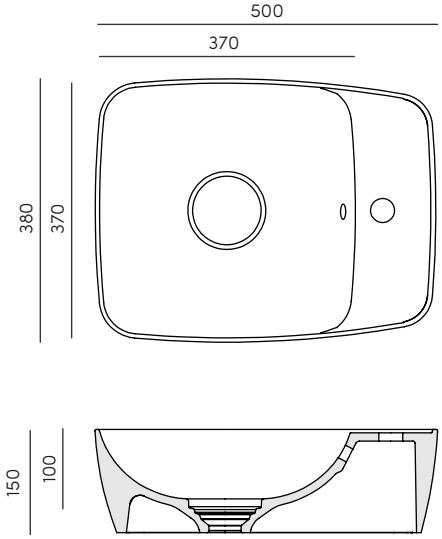

ext. - **500x380x150 mm**
int. - **370x370x100 mm**

KĀBU TOP **1005**

Finishes:
MOON WHITE

Valve not included.
Drain cover included.

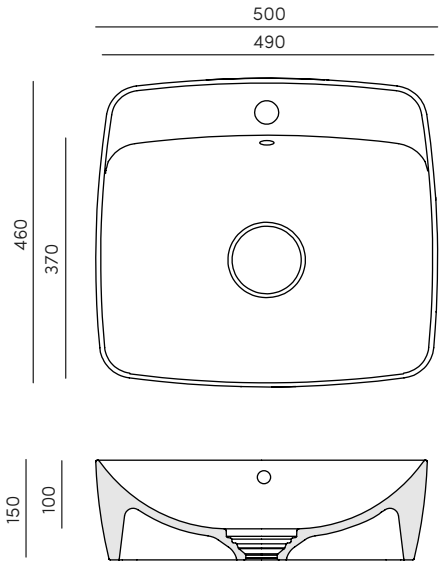

ext. - **500x460x150 mm**
int. - **490x380x100 mm**

ROXTON

KĀBU TOP **1001 SE**

Finishes:
MOON WHITE

Valve not included.
Drain cover included.

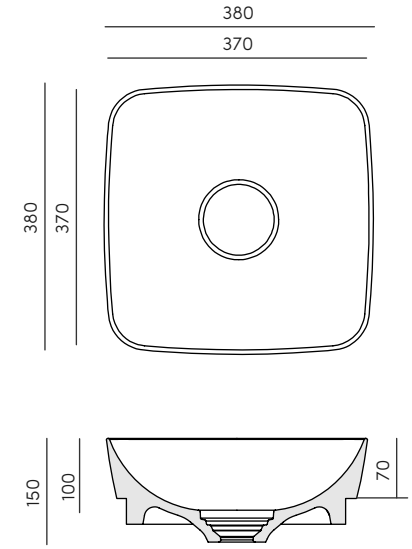

ext. - **380x380x150 mm**
int. - **370x370x100 mm**

KĀBU TOP **1002 SE**

Finishes:
MOON WHITE

Valve not included.
Drain cover included.

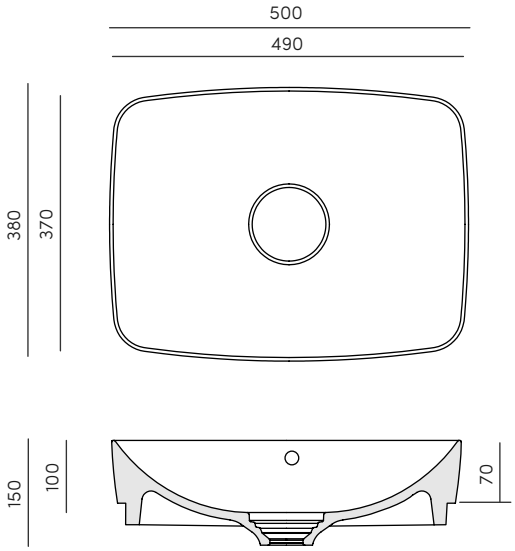

ext. - **500x380x150 mm**
int. - **490x370x100 mm**

KĀBU TOP **1003 SE**

Finishes:
MOON WHITE

Valve not included.
Drain cover included.

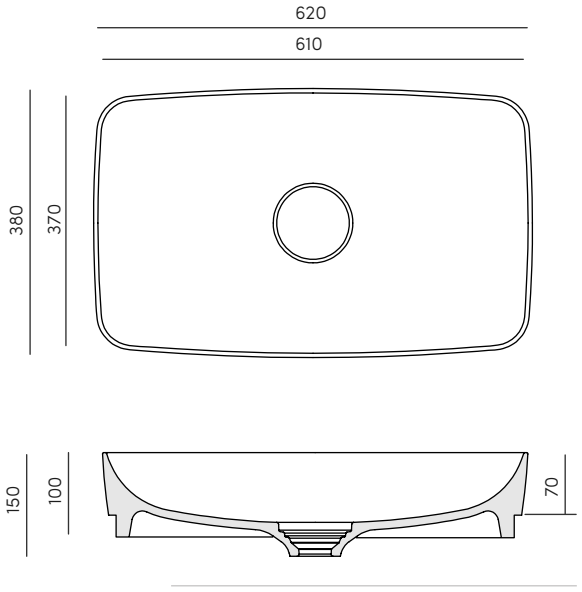

ext. - **620x380x150 mm**
int. - **610x370x100 mm**

ROXTON

WALL MOUNT COLLECTION

YONA WAL **3001**

Finishes:
MOON WHITE

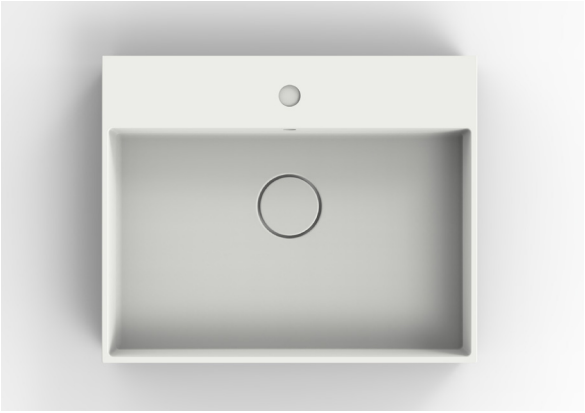

Valve not included.
Drain cover included.

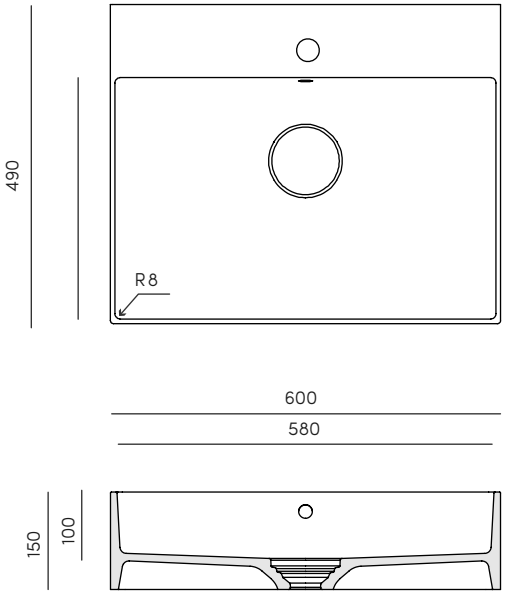

ext. - **600x490x150 mm**
int. - **580x365x100 mm**

YONA WAL **3002**

Finishes:
MOON WHITE

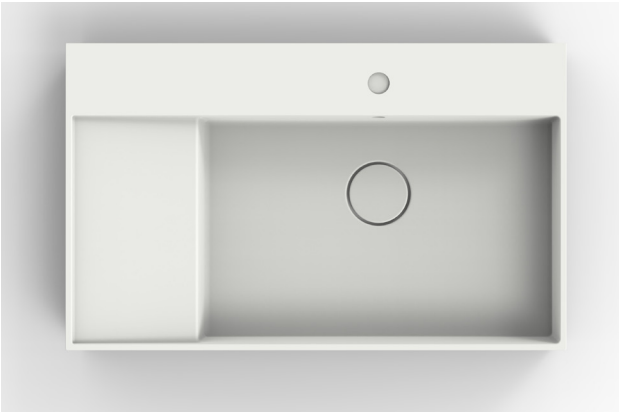

Valve not included.
Drain cover included.

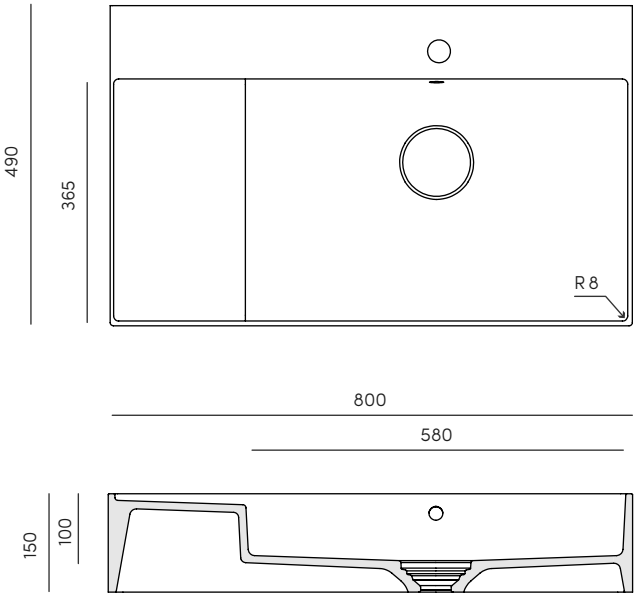

ext. - **800x490x150 mm**
int. - **580x365x100 mm**

YONA WAL **3003**

Finishes:
MOON WHITE

Valve not included.
Drain cover included.

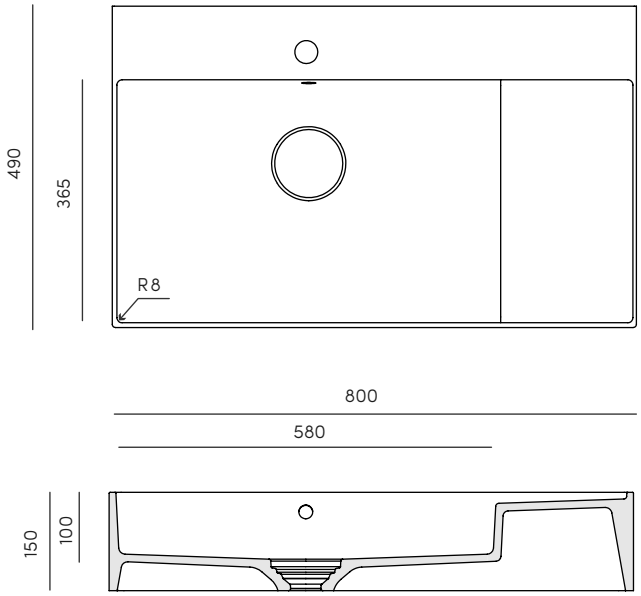

ext. - **800x490x150 mm**
int. - **580x365x100 mm**

YONA WAL **3004**

Finishes:
MOON WHITE

Valve not included.
Drain cover included.

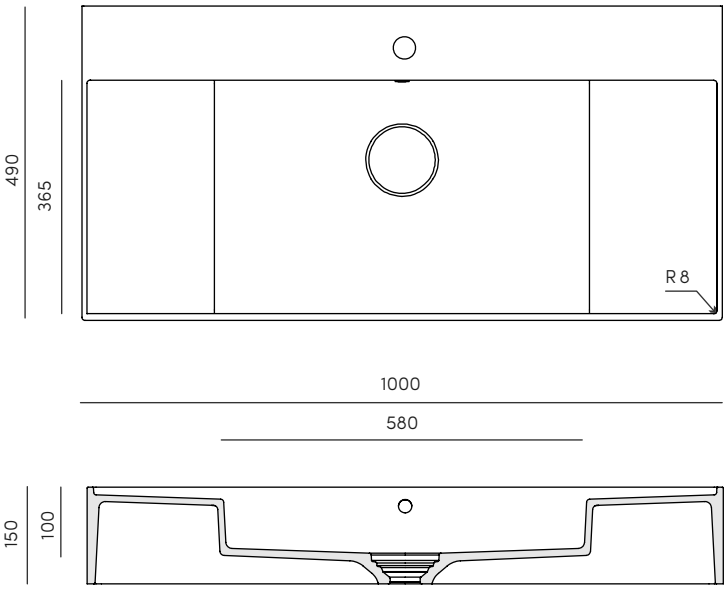

ext. - **1000x490x150 mm**
int. - **580x365x100 mm**

MIZU WAL **2001**

Finishes:
MOON WHITE

Valve not included.
Drain cover included.

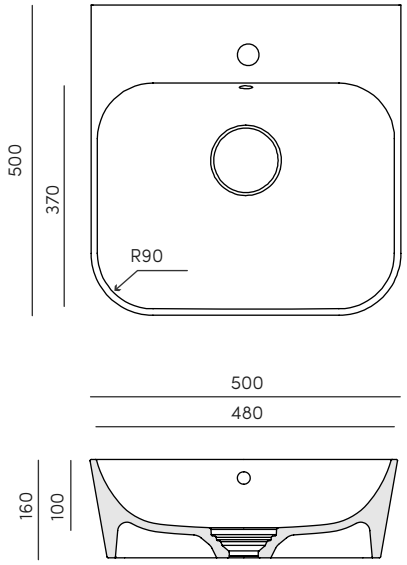

ext. - **500x500x160 mm**
int. - **480x370x100 mm**

MIZU WAL **2002**

Finishes:
MOON WHITE

Valve not included
Drain cover included.

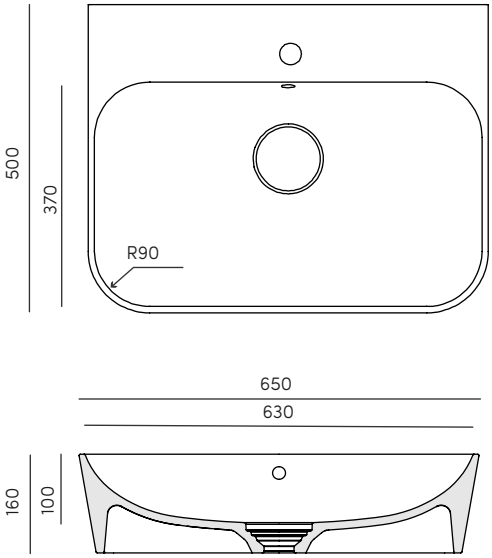

ext. - **650x500x160 mm**
int. - **630x370x100 mm**

ROXTON

ROXTON

COUNTERTOP IN CORIAN® BY DUPONT™ 12MM WITH INJECTED WASHBASIN. GLUED UNDER COUNTER.

Material:
CORIAN® GLACIER WHITE

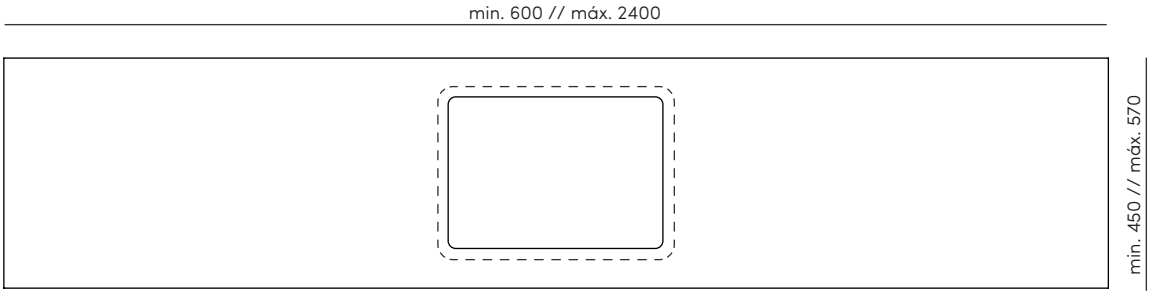

INTEGRATED WITH TOGO COLLECTION

TOGO 1300

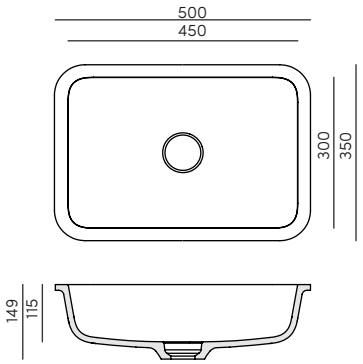

TOGO 1310

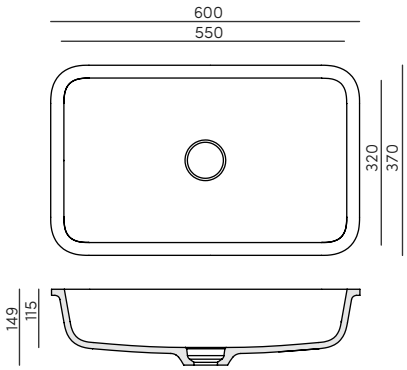

TOGO 1230

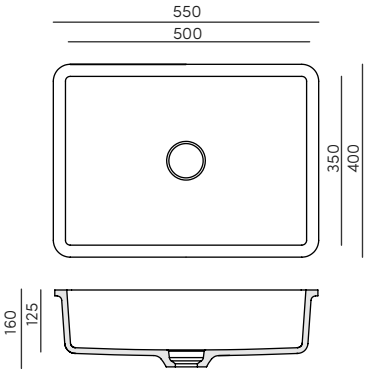

TOGO 1330

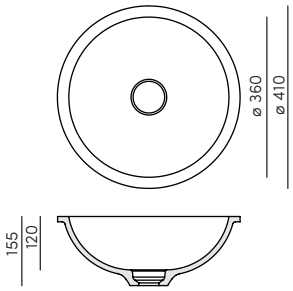

TOGO 1340

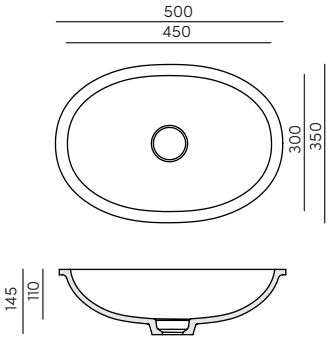

COUNTERTOP IN CORIAN® BY DUPONT™ 12MM WITH INJECTED WASHBASIN. GLUED UNDER COUNTER.

Material:
CORIAN® GLACIER WHITE

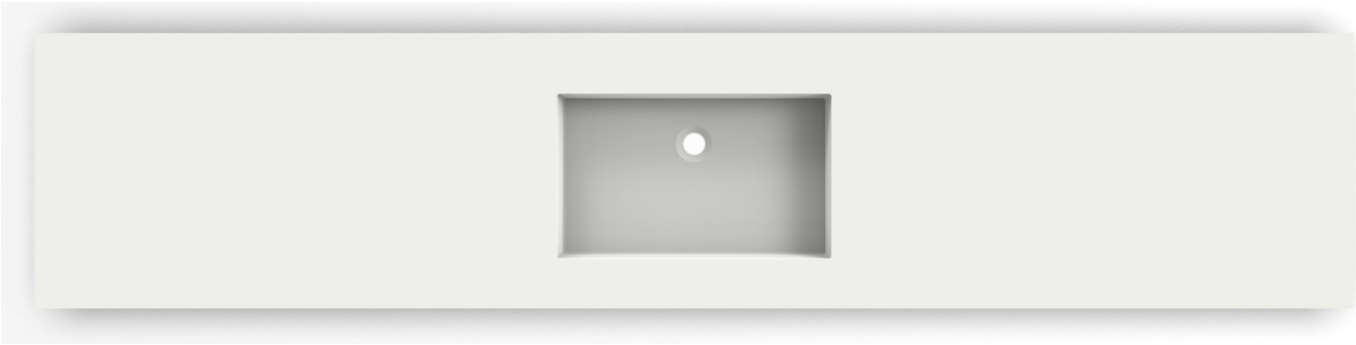

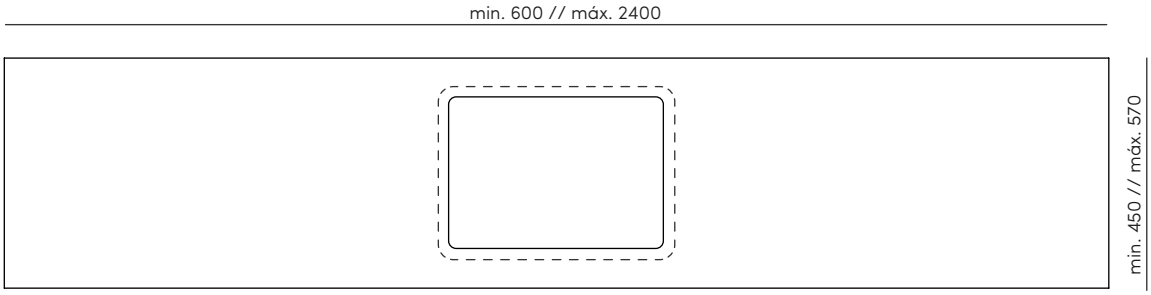

INTEGRATED WITH LECCO COLLECTION

LECCO 7000

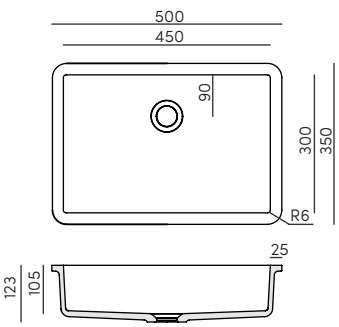

LECCO 7010

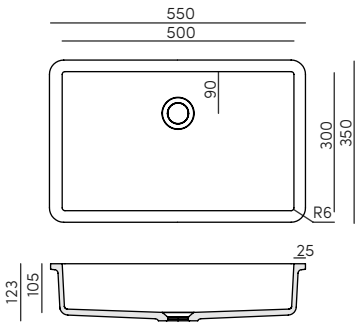

LECCO 7020

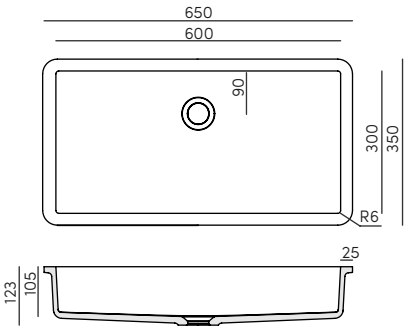

LECCO 7030

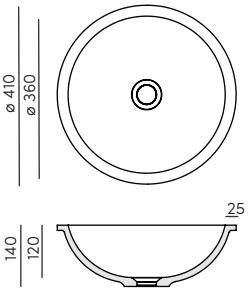

LECCO 7040

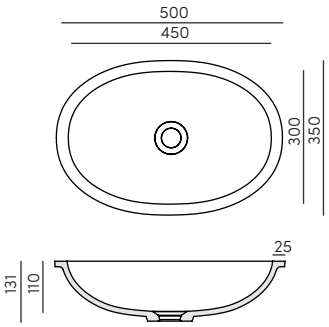

LECCO 7050

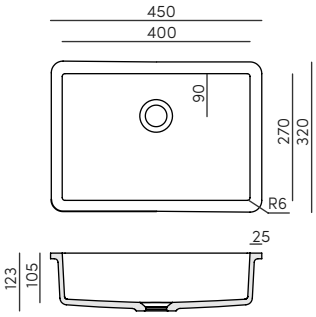

LECCO 7060

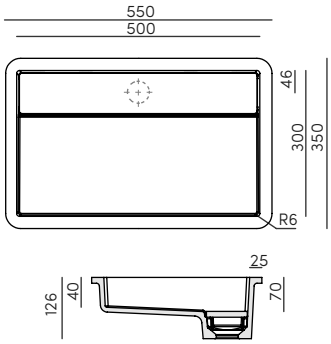

ROXTON

INTEGRATED COLLECTION

TOGO INT **1300**

Finishes:
MOON WHITE

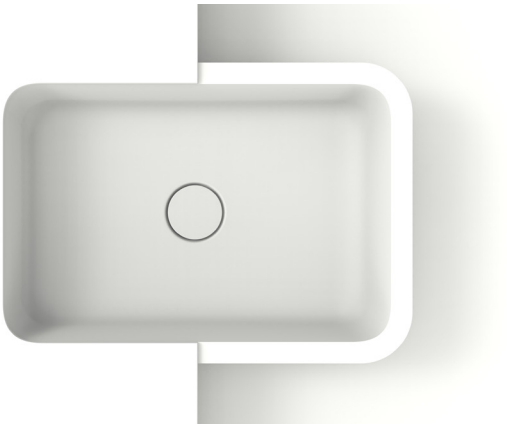

Only with valve **Ref. WVL.3001** (not included)

Flush draincover | Integrated installation | NO OVERFLOW

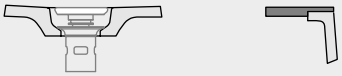

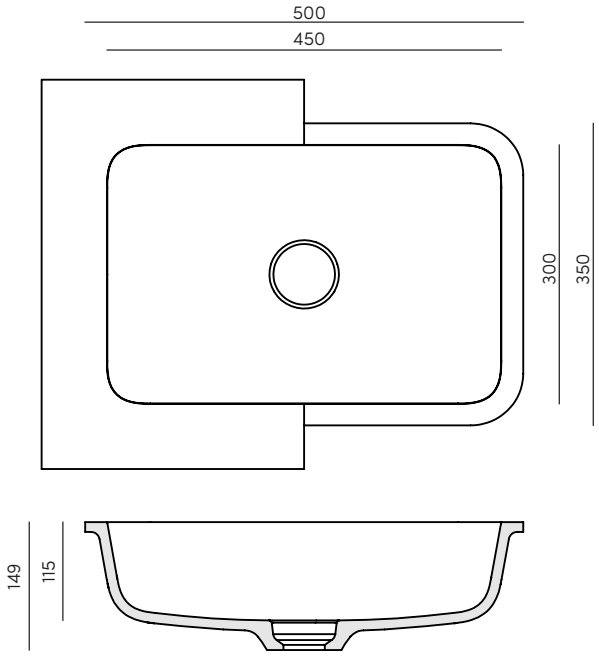

ext. - **500x350x149 mm**
int. - **450x300x115 mm**

TOGO INT **1310**

Finishes:
MOON WHITE

Only with valve **Ref. WVL.3001** (not included)

Flush draincover | Integrated installation | NO OVERFLOW

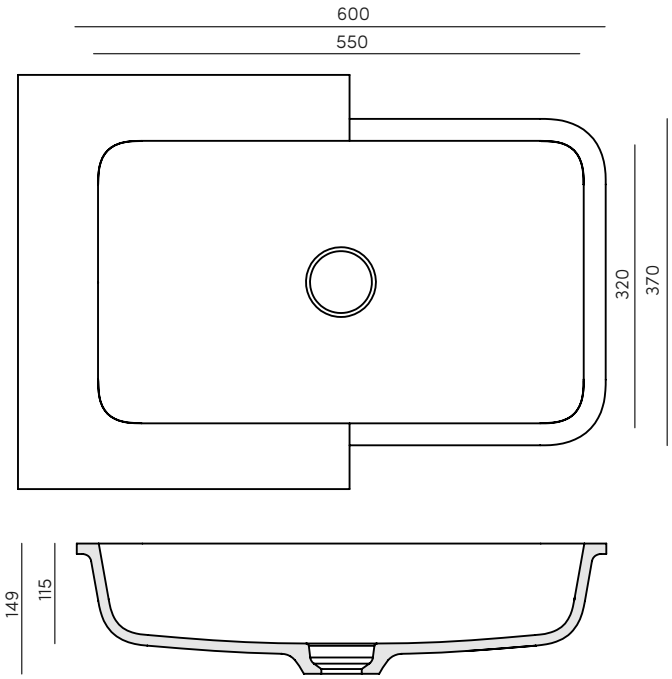

ext. - **574x344x148 mm**
int. - **550x320x110 mm**

TOGO INT **1230**

Finishes:
MOON WHITE

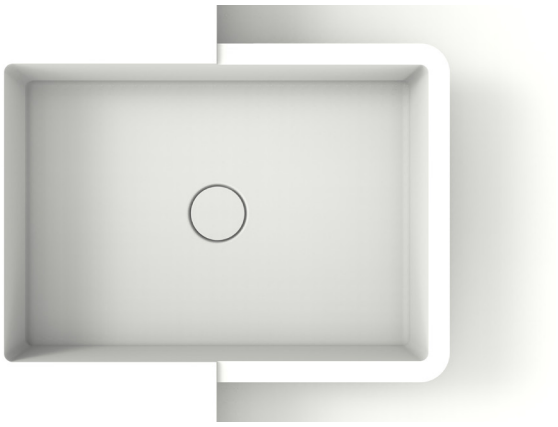

Only with valve **Ref. WVL.3001** (not included)

Flush draincover

Integrated installation

NO OVERFLOW

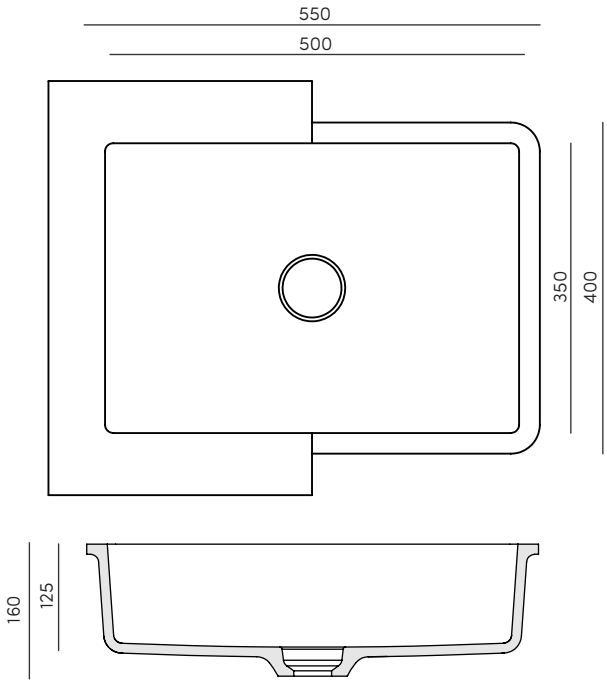

ext. - **550x400x160 mm**
int. - **500x352x125 mm**

TOGO INT **1330**

Finishes:
MOON WHITE

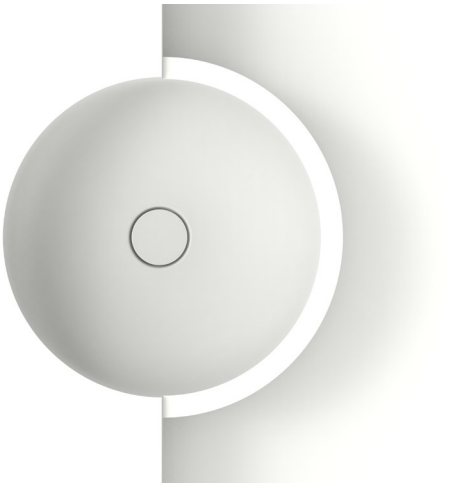

Only with valve **Ref. WVL.3001** (not included)

Flush draincover	Integrated installation	NO OVERFLOW

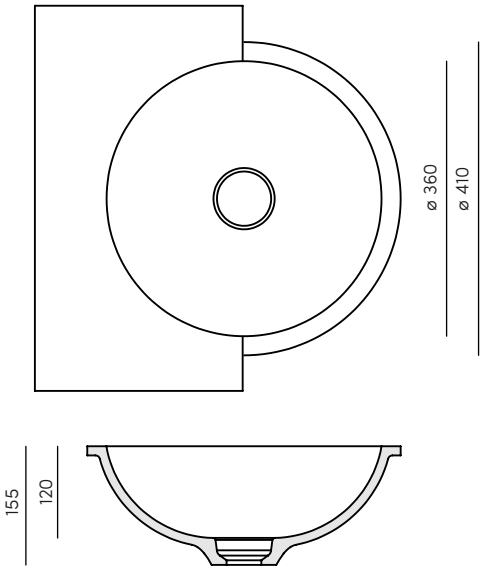

ext. - **Ø410x155 mm**
int. - **Ø360x120 mm**

TOGO INT **1340**

Finishes:
MOON WHITE

Only with valve **Ref. WVL.3001** (not included)

Flush draincover	Integrated installation	NO OVERFLOW

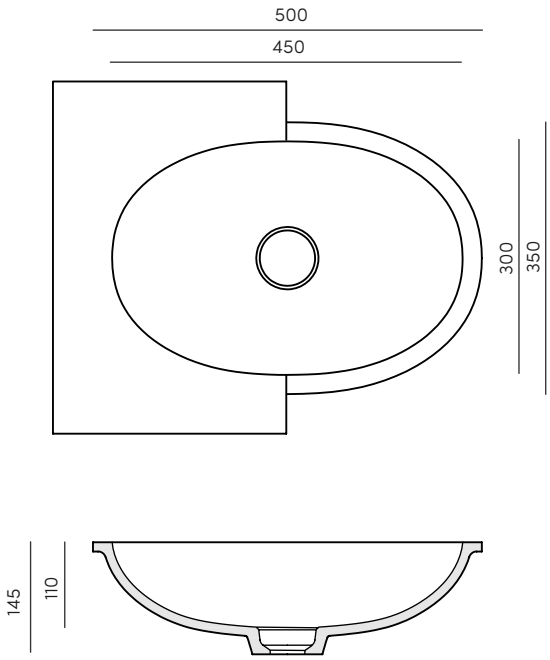

ext. - **500x 350x145 mm**
int. - **450x300x110 mm**

ROXTON

LECCO INT **7000**

Finishes:
MOON WHITE

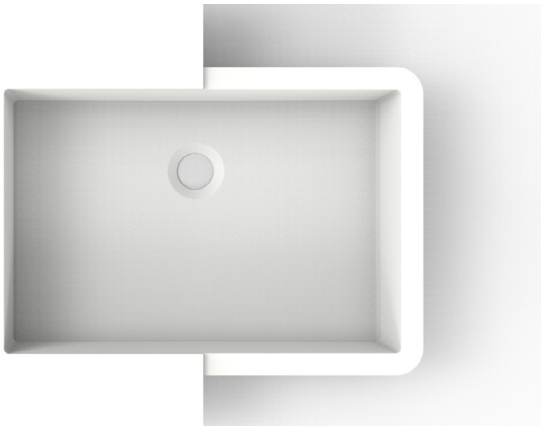

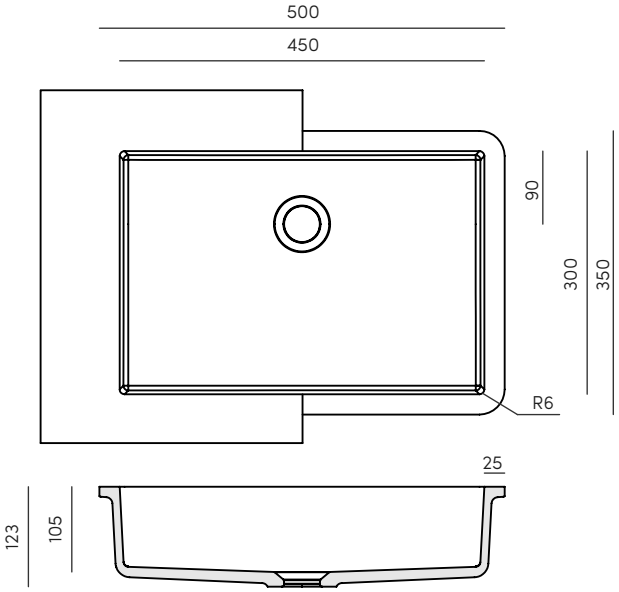

Standard drain | Integrated installation | NO OVERFLOW

ext. - **500x350x123 mm**
int. - **450x300x105 mm**

LECCO INT **7010**

Finishes:
MOON WHITE

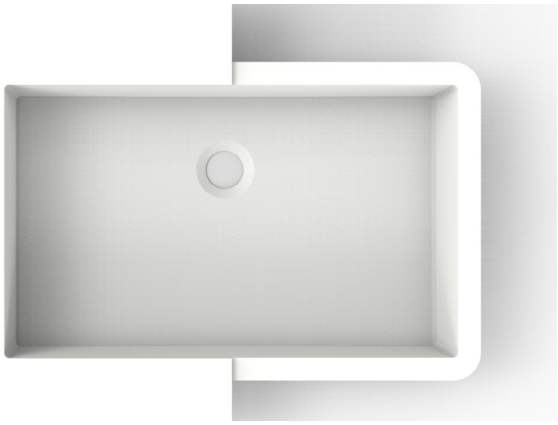

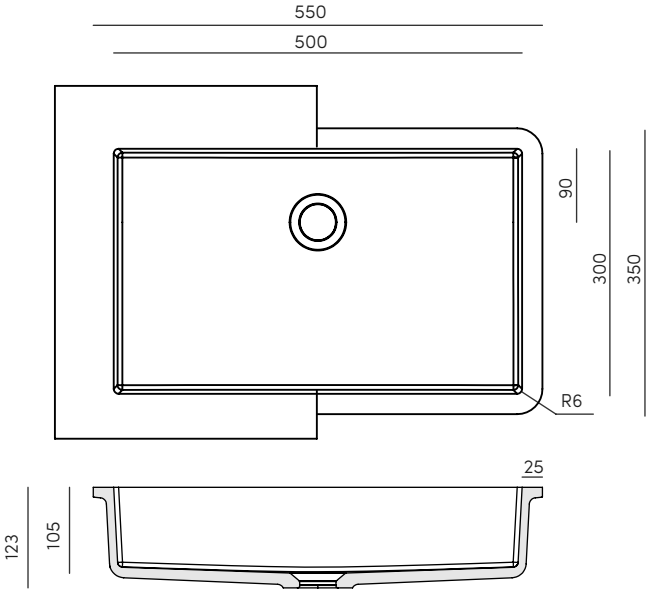

Standard drain | Integrated installation | NO OVERFLOW

ext. - **550x350x123 mm**
int. - **500x300x105 mm**

LECCO INT **7020**

Finishes:
MOON WHITE

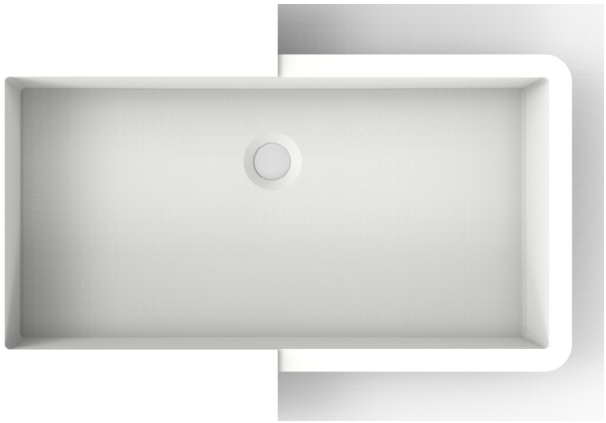

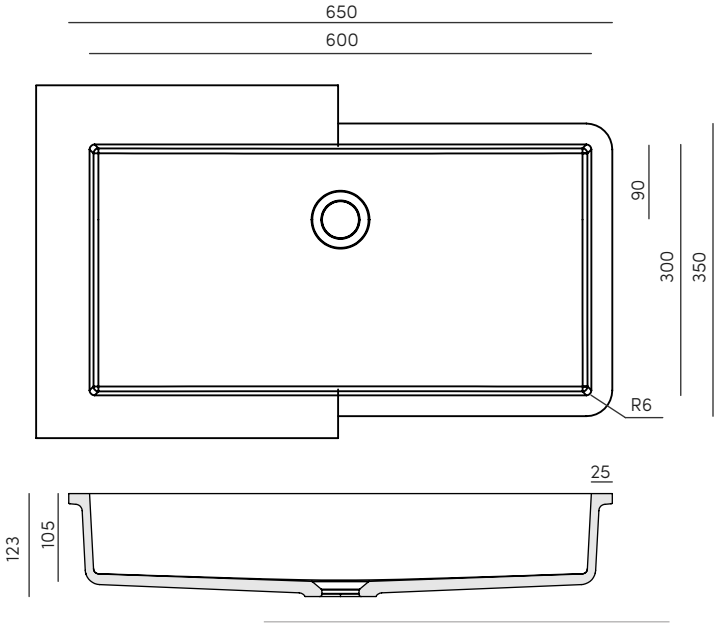

Standard drain | Integrated installation | NO OVERFLOW

ext. - **650x350x123 mm**
int. - **600x300x105 mm**

LECCO INT **7050**

Finishes:
MOON WHITE

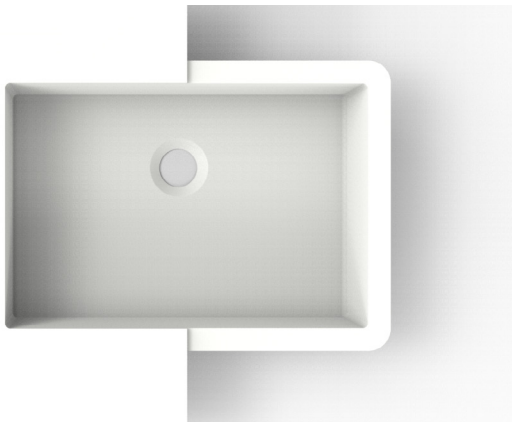

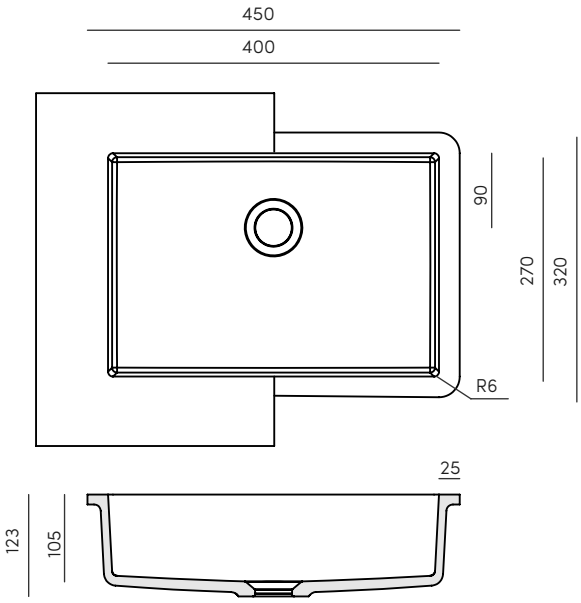

Standard drain | Integrated installation | NO OVERFLOW

ext. - **450x320x123 mm**
int. - **400x270x105 mm**

LECCO INT **7030**

Finishes:
MOON WHITE

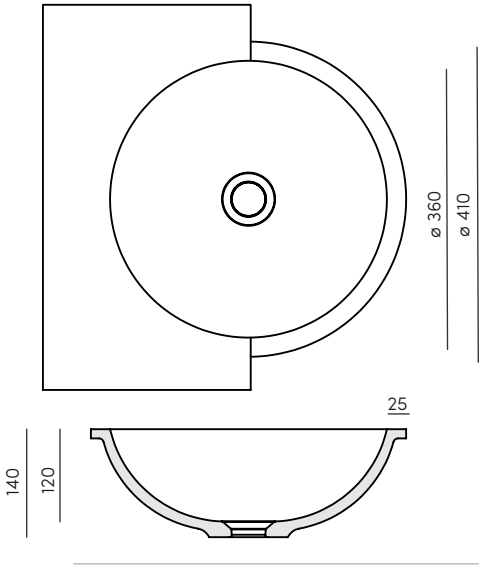

ext. - ø**410x140 mm**
int. - **ø360x120 mm**

Standard drain	Integrated installation	NO OVERFLOW
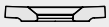		

LECCO INT **7040**

Finishes:
MOON WHITE

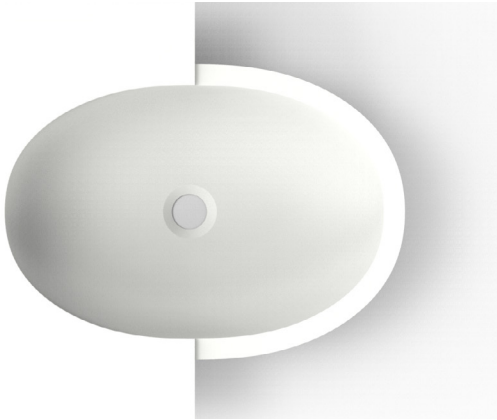

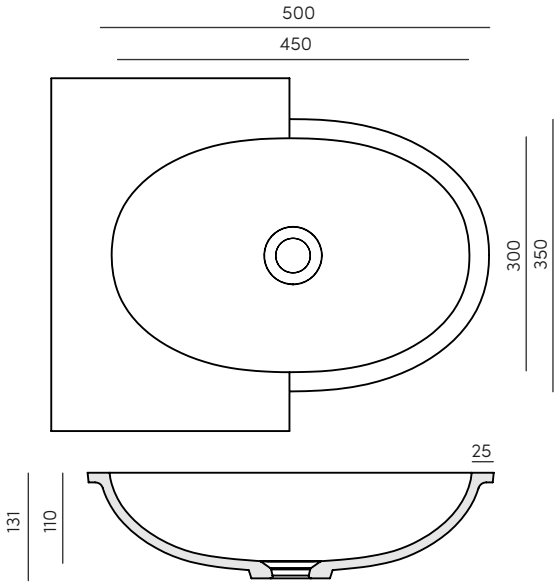

ext. - **574x344x148 mm**
int. - **550x320x110 mm**

Standard drain	Integrated installation	NO OVERFLOW

LECCO INT **7060**

Finishes:
MOON WHITE

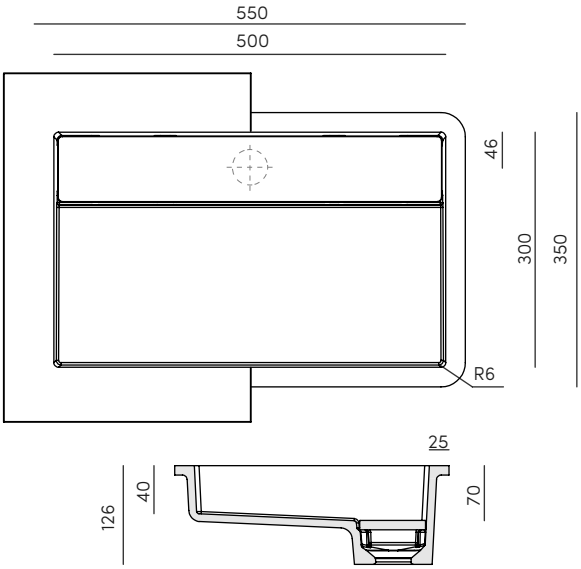

Standard drain

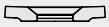

Integrated installation

NO OVERFLOW

ext. - **650x350x123 mm**
int. - **600x300x105 mm**

ROXTON

BATHTUBS COLLECTION

KĀBU BAT **1011**

FREESTANDING

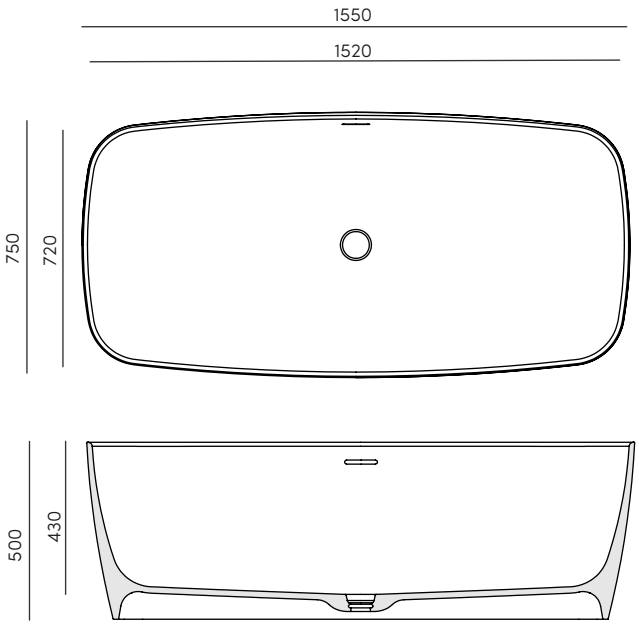

ext. - **1550x750x500 mm**

Technical specifications:

Flush drain / Valve included

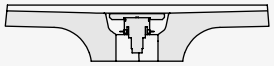

Finished: fine edge

WITH OVERFLOW

Finishes:

EXTERIOR LACQUERED

MOON WHITE | KL23 | KL13 | KL11 | KL14

KĀBU BAT **1012**

FREESTANDING

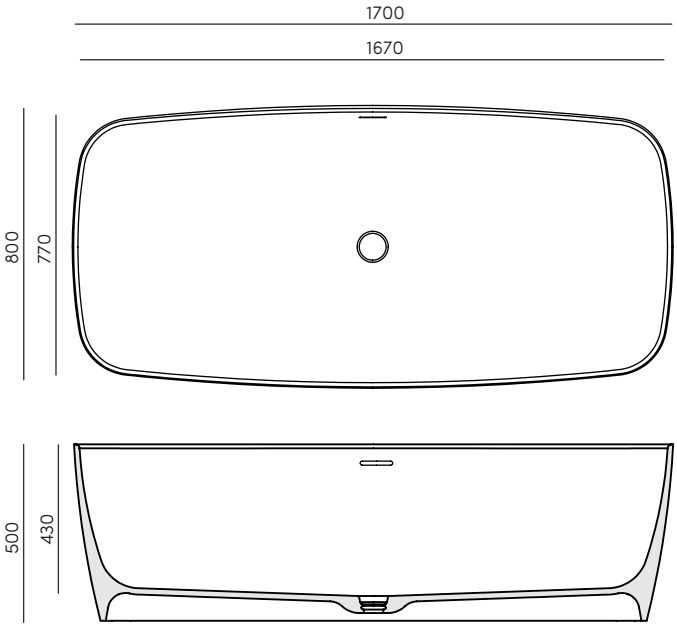

ext. - **1700x800x500 mm**

Technical specifications:

Flush drain / Valve included

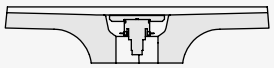

Finished: fine edge

WITH OVERFLOW

Finishes:

EXTERIOR LACQUERED

MOON WHITE | KL23 | KL13 | KL11 | KL14

ROXTON

ALTEA **150 / 160 / 170**

FREESTANDING

ALTEA **150**

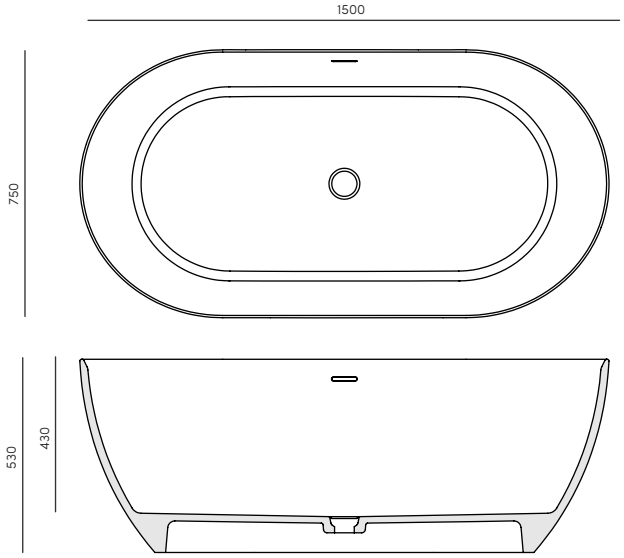

ext. - **1600x750x530 mm**

Technical specifications:

Flush drain / Valve included

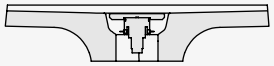

Finished: fine edge

WITH OVERFLOW

Finishes:

EXTERIOR LACQUERED

MOON WHITE | KL23 | KL13 | KL11 | KL14

ALTEA **160**

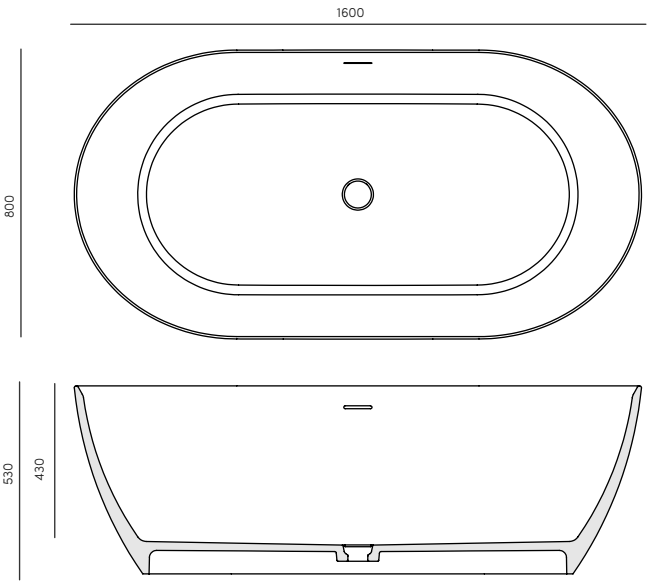

ext. - **1600x800x530 mm**

ALTEA **170**

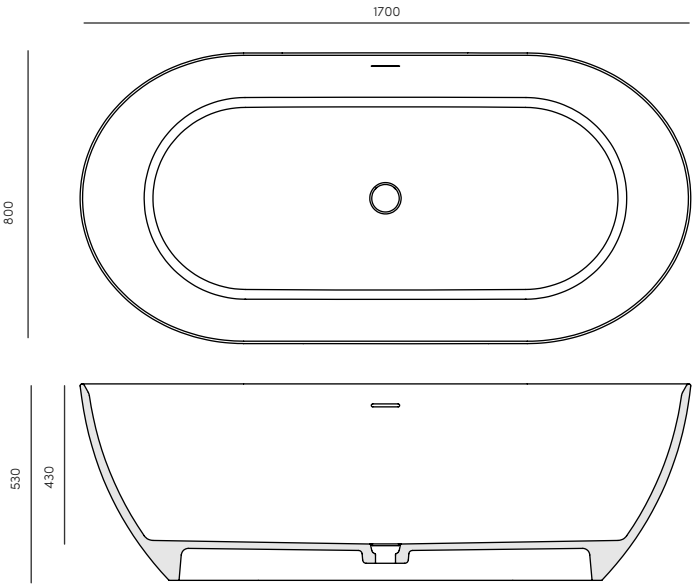

ext. - **1700x800x530 mm**

SHIRO **150 / 160 / 170**

FREESTANDING

SHIRO **150**

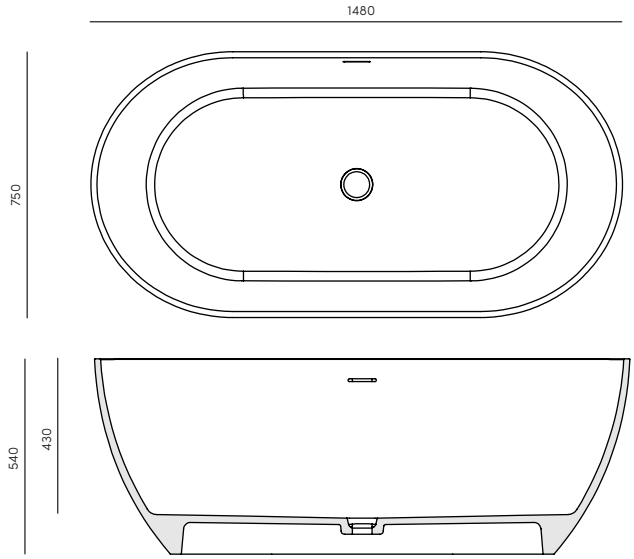

ext. - **1480x750x540 mm**

Technical specifications:

Flush drain / Valve included

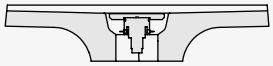

Finished: thick edge

WITH OVERFLOW

Finishes:

EXTERIOR LACQUERED

MOON WHITE | KL23 | KL13 | KL11 | KL14

SHIRO **160**

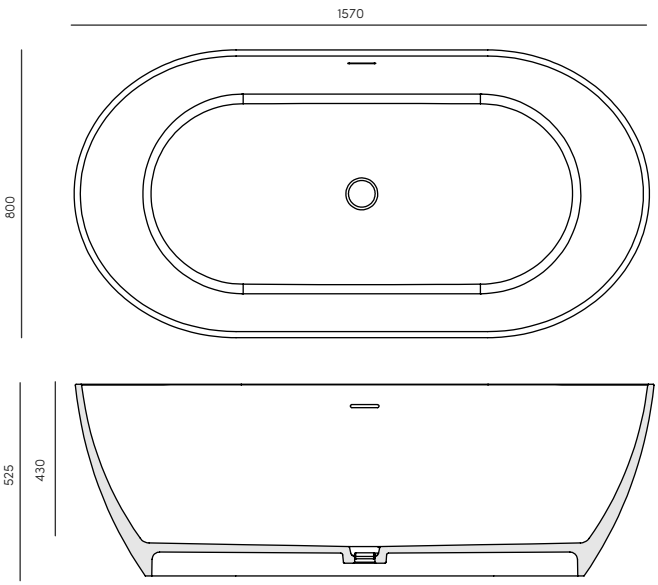

ext. - **1570x800x525 mm**

SHIRO **170**

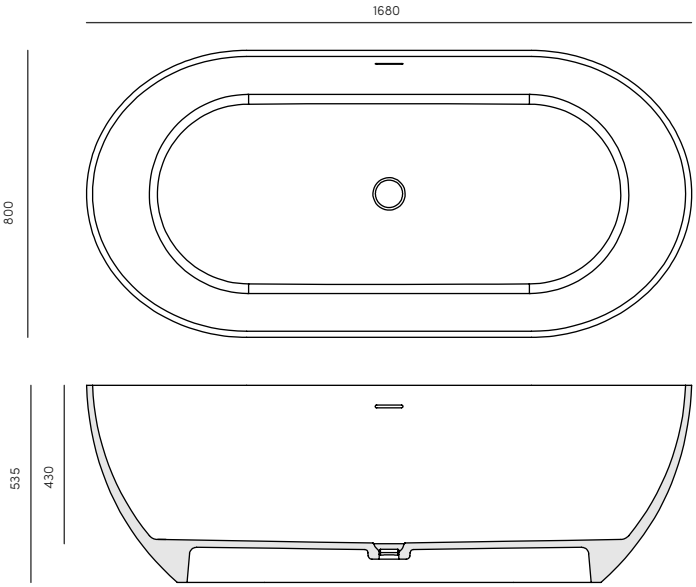

ext. - **1680x800x535 mm**

SICILIA **180**

FREESTANDING

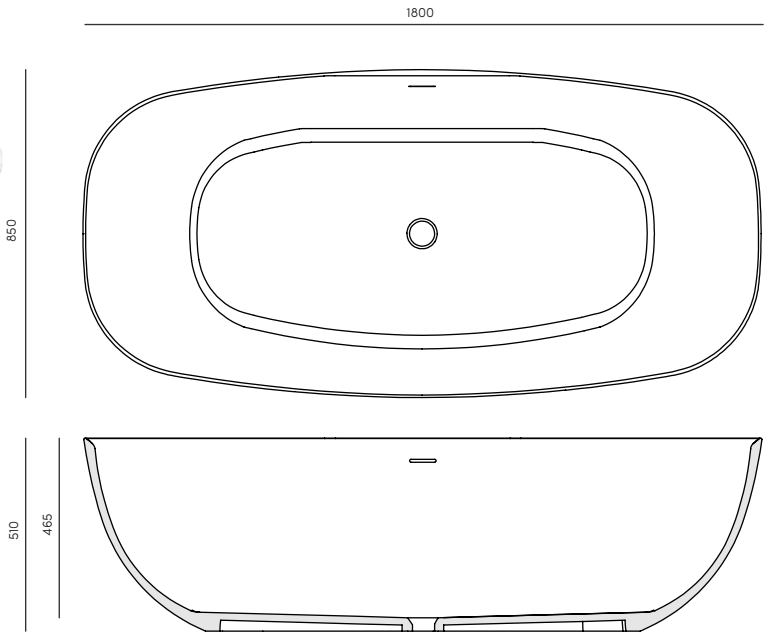

Technical specifications:

Flush drain / Valve included

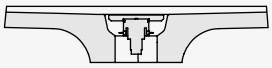

Finished: fine edge

WITH OVERFLOW

Finishes:

EXTERIOR LACQUERED

MOON WHITE | KL23 | KL13 | KL11 | KL14

ext. - **1800x850x510 mm**

MENORCA **170**

FREESTANDING

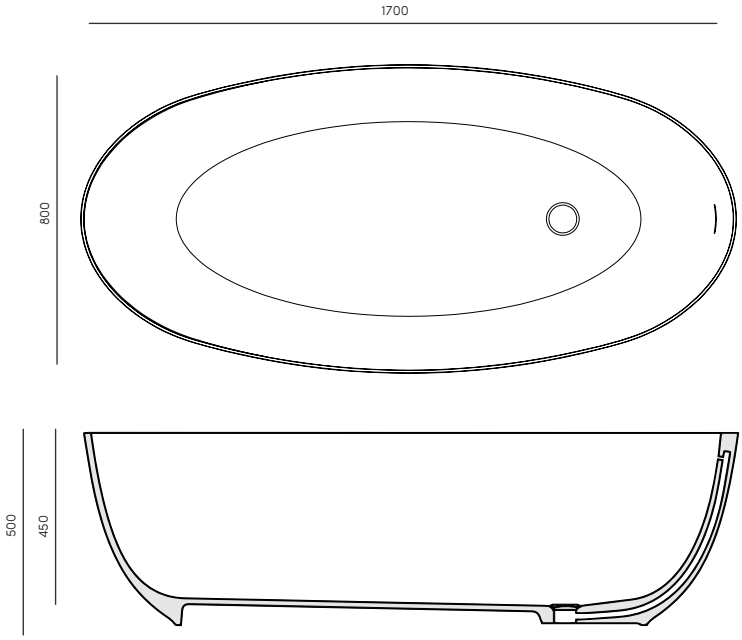

Technical specifications:

Flush drain / Valve included

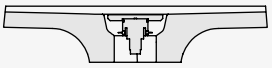

Finished: fine edge

WITH OVERFLOW

Finishes:

EXTERIOR LACQUERED

MOON WHITE | KL23 | KL13 | KL11 | KL14

ext. - **1700x800x500 mm**

IBIZA **160**

FREESTANDING

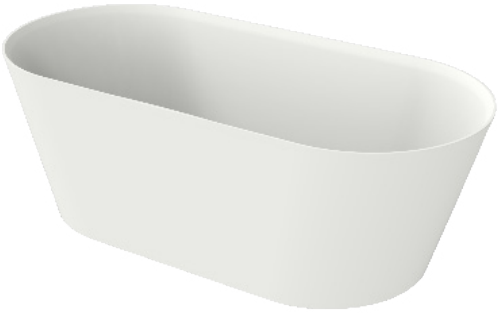

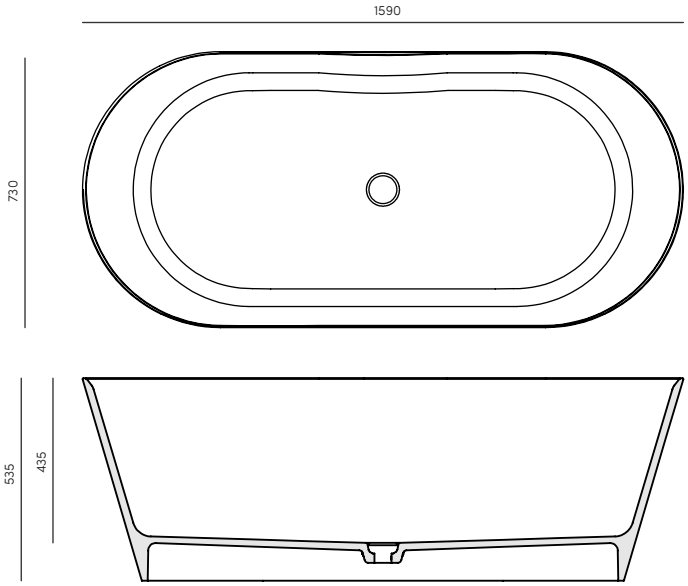

Technical specifications:

Flush drain / Valve included

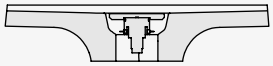

Finished: fineedge

NO OVERFLOW

Finishes:

EXTERIOR LACQUERED

MOON WHITE | KL23 | KL13 | KL11 | KL14

ext. - **1590x730x535 mm**

CAPRI **180**

FREESTANDING

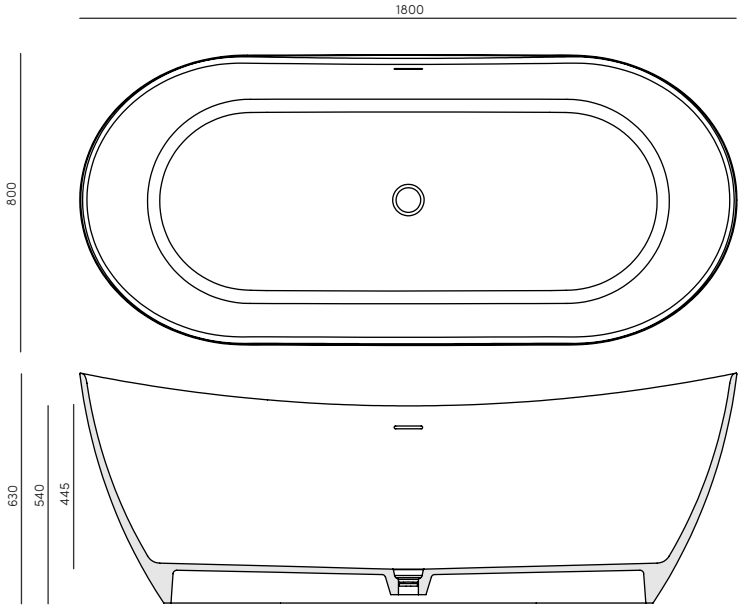

Technical specifications:

Flush drain / Valve included

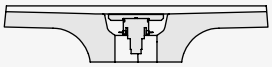

Finished: fineedge

WITH OVERFLOW

Finishes:

EXTERIOR LACQUERED

MOON WHITE | KL23 | KL13 | KL11 | KL14

ext. - **1590x730x535 mm**

MIZU BAT **2011**

WALL MOUNT

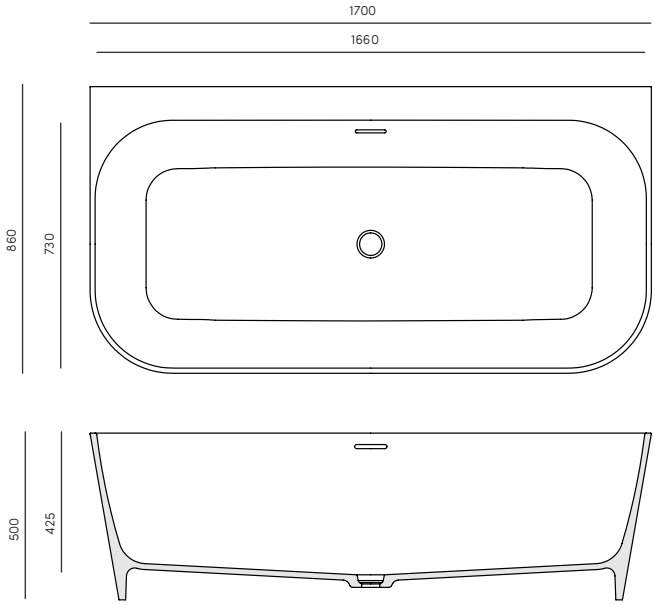

Technical specifications:

Flush drain / Valve included

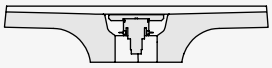

Finished: thick edge

WITH OVERFLOW

Finishes:

EXTERIOR LACQUERED

MOON WHITE	KL23	KL13	KL11	KL14

ext. - **1700x860x500 mm**
int. - **1660x730x425 mm**

ROXTON

TOGO BAT **8440**

INTEGRATED

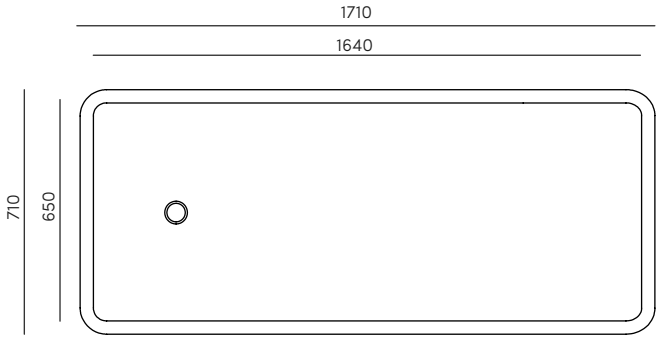

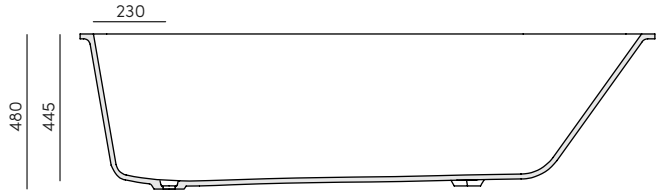

ext. - **1710x710x480 mm**
int. - **1640x650x435 mm**

Technical specifications:

Flush drain / Valve included

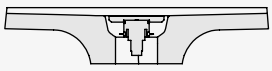

Integrated installation

WITH OVERFLOW

Finishes:

MOON WHITE

FREESTANDING (4 SIDES)

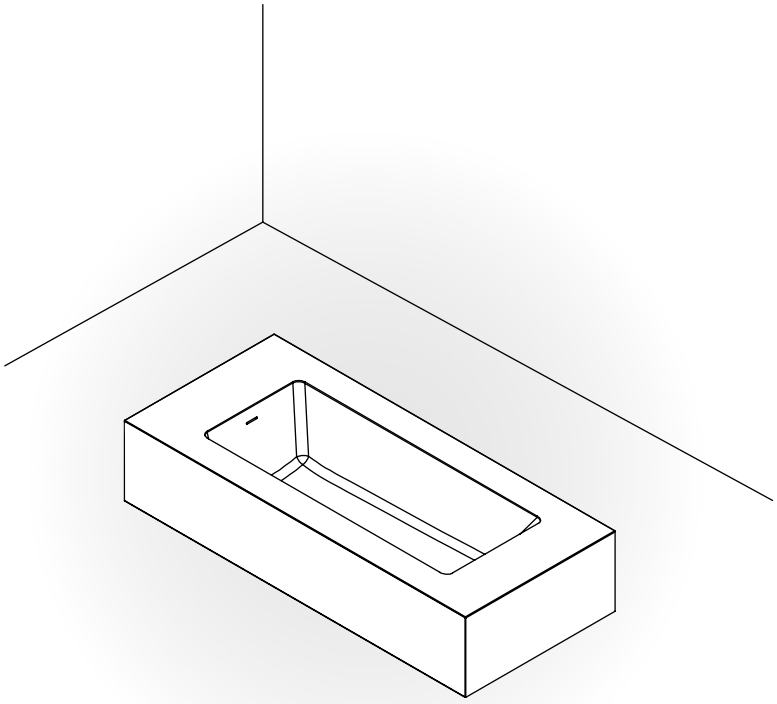

1 SIDE

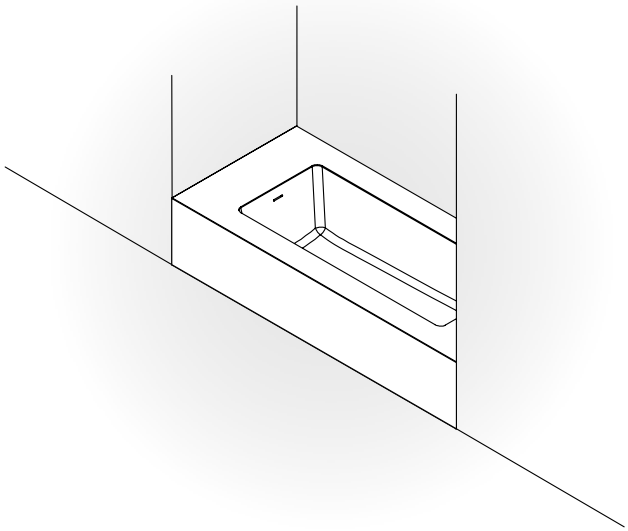

2 SIDES

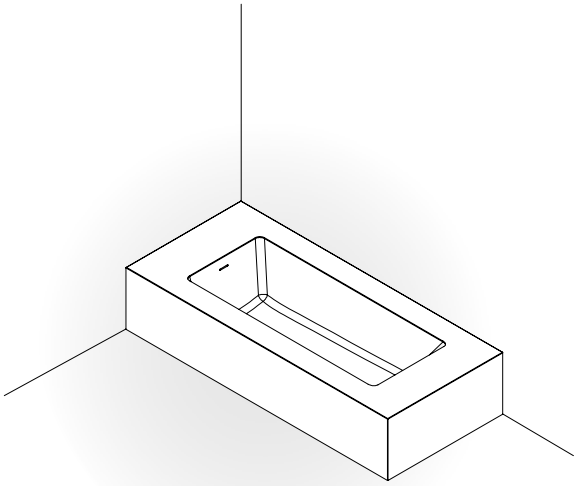

3 SIDES

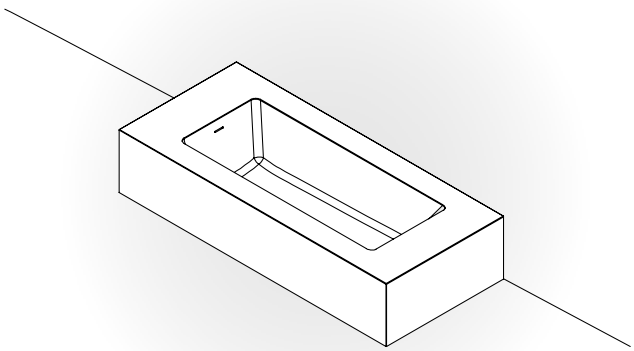

VALVE FOR KĀBU, YONA AND MIZU COLLECTION

WASHBASIN
DRAIN COVER IN CORIAN®

Finishes:
MOON WHITE

Ref. WDC.3001.MW

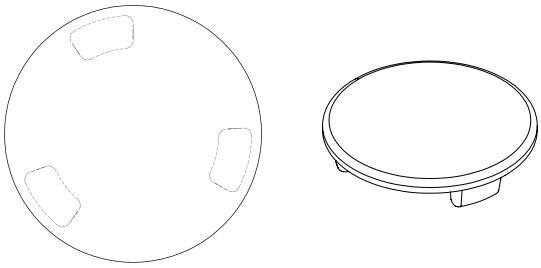

Ø 100 mm

WASHBASIN VALVE

Finishes cover:
CHROMED

Ref. WVL.1001.CR

VALVE FOR SHIRO AND TOGO COLLECTION

WASHBASIN VALVE

Finishes cover:
MOON WHITE — CHROMED

Ref. WVL.3001.MW — **Ref. WVL.3001.CR**

VALVES FOR BATHTUB COLLECTION

BATHTUB VALVE WITH SIPHON

Finishes cover:
MOON WHITE — CHROMED

Ref. BVL.5001.MW — **Ref. BVL.5001.CR**

Ref. BVL.7001.MW (Mod. 8440) — **Ref. BVL.7001.CR** (Mod. 8440)

OVERFLOWS

Overflow grill (Ø21 mm) finished:
MOON WHITE — CHROMED

Ref. WOF.0101.MW — **Ref. WOF.0101.CR**

Overflow grill (Ø21 mm) finished:
MOON WHITE — CHROMED

Ref. WOF.0201.MW — **Ref. WOF.0201.CR**

MATERIAL

CORIAN® material is essentially a modified acrylic (AMP) and is composed of natural mineral ATH (Alumina Trihydrate) and ISO-NPG resins of the latest generation and highest quality.

CORIAN® material in any of its applications is characterized by its unique velvety texture and is a solid, solid, non-porous, non-flammable material with nuclear whiteness, high refractive index and demanding resistance parameters. It is hygienic, inert, non-toxic, practically fireproof, easy to maintain, repairable and highly resistant to chemical agents, steam or weathering.

The exclusive composition of CORIAN® allows the material to inherit the technical and aesthetic characteristics of the mineral and combine them with the technical characteristics of polymers, with clear particularities: no proliferation of bacteria, hardness, resistance, durability, ease of repair, low maintenance and easy cleaning.

TECHNICAL CHARACTERISTICS

PERFORMANCE PROPERTIES

BATHTUBS IN CORIAN® DESIGN

TEST CONDUCTED	TEST METHOD	RESULT
Appearance and cleanability (evaluation)	UNE -EN 14516+A1	Correct
Water evacuation (evaluation)	UNE -EN 14516+A1	Correct*
Stability of the fund (evaluation)	UNE -EN 14516+A1	No stagnation Correct
Resistance to chemicals and dyes (evaluation)	UNE -EN 14516+A1	No deterioration Correct
Resistance to temperature variations (evaluation)	UNE -EN 14516+A1	No deterioration Correcto

TEST REPORT nº 221.I.2007.785.ES.01 FOR BATHTUBS DONE BY AIDIMME.

TEST CONDUCTED	TEST METHOD	RESULT
Resistance to dry heat at 180º. Appearance (evaluation)	UNE-EN 14688 Apartado 5.4	Correcto
Resistance to dry heat at 180º. Defects (evaluation)	UNE-EN 14688 Apartado 5.4	Sin defectos Correcto

TEST REPORT nº 221.I.2007.751.ES.01 FOR WASHBASINS DONE FOR AIDIMME.

TEST CONDUCTED	TEST METHOD	RESULT
Protección contra el desbordamiento Caudal del rebosadero (l/s)	EN 14688 Apartado 5.9	0,25 (0,01)

TEST REPORT nº 221.I.2109968.ES.01 FOR BATHTUBS DONE BY AIDIMME.

WASHBASINS IN CORIAN® DESIGN

TEST CONDUCTED	TEST METHOD	RESULT
Load resistance (evaluation)	EN 14688 Section 5.2	Not applicable*
Water evacuation (evaluation)	EN 14688 Section 5.3	Correct
Resistance to temperature changes (evaluation)	EN 14688 Section 5.4	No deterioration Correct
Chemical and stain resistance (evaluation)	EN 14688 Section 5.5	No surface deterioration Correct
Surface stability. Scratching	EN 14688 Section 5.6	Not applicable**
Surface stability. Abrasion	EN 14688 Section 5.7	Not applicable**
Cleanability (evaluation)	EN 14688 Section 5.8	Correct
Overflow protection - Overflow flow rate (l/s) - Overflow class	EN 14688 Section 5.9	No overflow CL00
Durability	EN 14688 Section 4.8	Durable

TEST REPORT No. 221.I.2007.751.EN.01 FOR WASHBASINS DONE BY AIDIMME.

AIDIMME INSTITUTO TECNOLÓGICO